(c) JEPPESEN SANDERSON, INC., 2025, ALL RIGHTS RESERVED

List of pages in this Trip Kit

Trip Kit Index
Airport Information For EKSP
Terminal Charts For EKSP
Revision Letter For Cycle 16-2023
Change Notices
Notebook

(c) JEPPESEN SANDERSON, INC., 2025, ALL RIGHTS RESERVED

General Information

Location: VOJENS DNK
ICAO/IATA: EKSP / SKS
Lat/Long: N55° 13.53', E009° 15.84'
Elevation: 141 ft

Airport Use: Joint-Use
Daylight Savings: Observed
UTC Conversion: -1:00 = UTC
Magnetic Variation: 2.0° E

Fuel Types: 100 Octane (LL)
Customs: Yes
Airport Type: IFR
Landing Fee: No
Control Tower: Yes
Jet Start Unit: No
LLWS Alert: No
Beacon: No

Sunrise: 0420 Z
Sunset: 1828 Z

Runway Information

Runway: 10L
Length x Width: 9862 ft x 148 ft
Surface Type: asphalt
TDZ-Elev: 127 ft
Lighting: Edge, ALS

Runway: 10R
Length x Width: 9747 ft x 79 ft
Surface Type: asphalt
TDZ-Elev: 125 ft
Lighting: Edge

Runway: 28L
Length x Width: 9747 ft x 79 ft
Surface Type: asphalt
TDZ-Elev: 139 ft
Lighting: Edge

Runway: 28R
Length x Width: 9862 ft x 148 ft
Surface Type: asphalt
TDZ-Elev: 141 ft
Lighting: Edge, ALS

(c) JEPPESEN SANDERSON, INC., 2025, ALL RIGHTS RESERVED

Communication Information

ATIS: 133.900
Skrydstrup Tower: 118.275
Skrydstrup Tower: 25.780 Military
Skrydstrup Tower: 28.637 Military
Skrydstrup Approach: 124.100
Skrydstrup Approach: 31.510 Military
Skrydstrup Arrival: 24.562 Military
Skrydstrup Arrival: 34.400 Secondary Military
Skrydstrup Arrival: 122.200

Printed from JeppView for Windows 5.3.0.0 on 28 Aug 2025; Terminal chart data cycle 16-2023 (Expired); Notice: After 17 Aug 2023, 0000Z, this chart may no longer be valid

EKSP/SKS

Apt Elev **141'**
N55 13.5 E009 15.8

JEPPESEN

12 OCT 18 (10-9)

VOJENS, ~~DENMARK~~
SKRYDSTRUP

ATIS	SKRYDSTRUP Tower
133.9	118.275

For UHF see MIL-101 listing

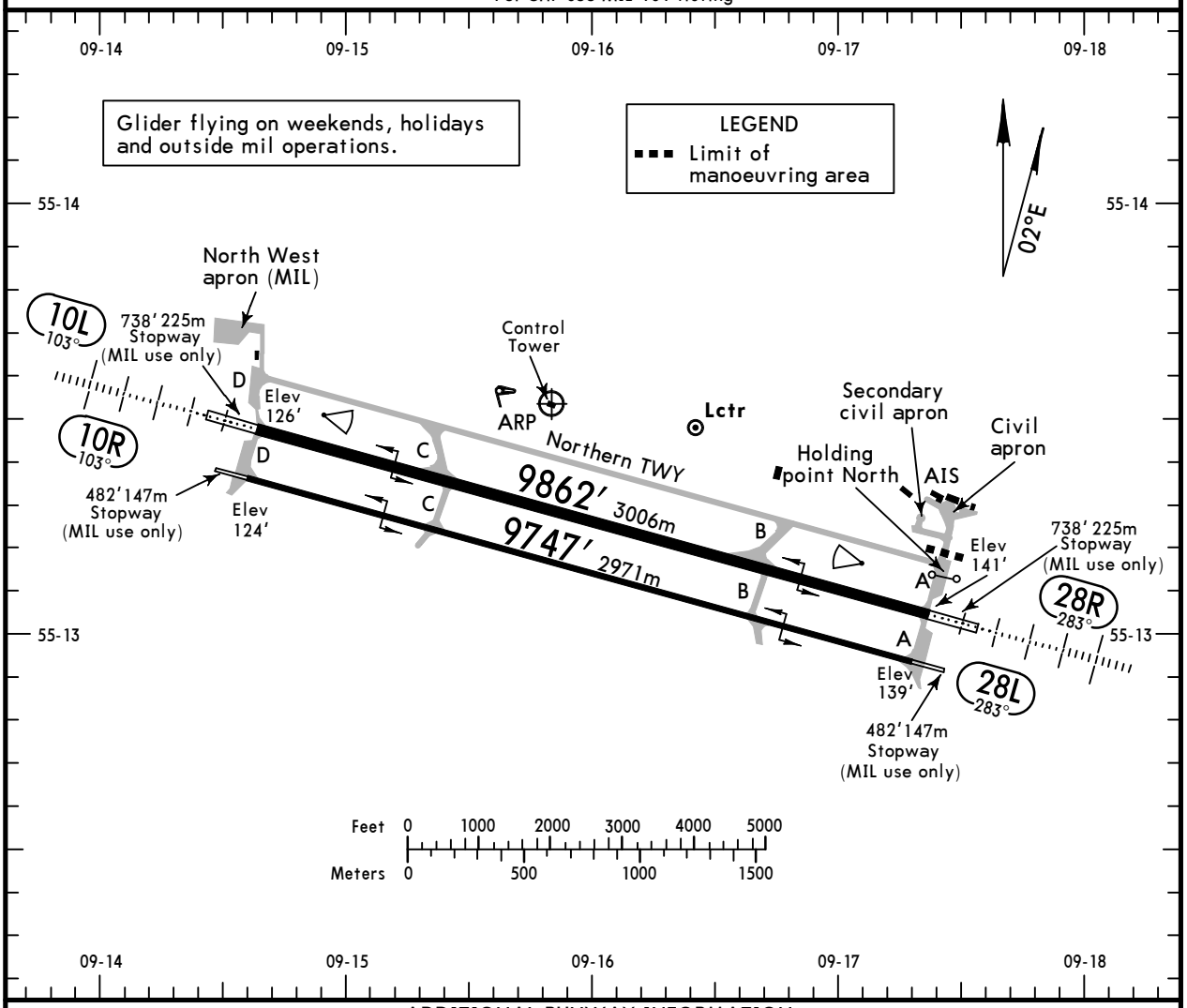

ADDITIONAL RUNWAY INFORMATION

RWY		USABLE LENGTHS — LANDING BEYOND — Threshold	Glide Slope	TAKE-OFF	WIDTH
10L 28R	HIRL HIALS PAPI (angle 3.0°) RVR		8890' 2710m 9072' 2765m	❶	148' 45m
10R 28L	RL PAPI (angle 3.0°)				75' 23m

❶ TAKE-OFF RUN AVAILABLE

RWY 10L:
From rwy head (twy D) 9862' (3006m)
twy C int 7274' (2217m)
twy B int 2644' (806m)

RWY 10R:
From rwy head (twy D) 9747' (2971m)
twy C int 7067' (2154m)
twy B int 2359' (719m)

RWY 28R:
From rwy head (twy A) 9862' (3006m)
twy B int 7421' (2262m)
twy C int 2838' (865m)

RWY 28L:
From rwy head (twy A) 9747' (2971m)
twy B int 7457' (2273m)
twy C int 2759' (841m)

Standard TAKE-OFF & IFR DEPARTURE PROCEDURE

	Low Visibility Take-off Day: RL & RCLM Night: RL	Day: RL or RCLM Night: RL	Adequate vis ref (Day only)
A B C D	RVR 300m	400m	500m

OMNIDIRECTIONAL DEPARTURE PROCEDURE

Rwy 10L/R & 28L/R: Climb STRAIGHT AHEAD to minimum turning altitude 800'.

CHANGES: Location and airport names.

© JEPPESEN, 1999, 2018. ALL RIGHTS RESERVED.

Printed from JeppView for Windows 5.3.0.0 on 28 Aug 2025; Terminal chart data cycle 16-2023 (Expired); Notice: After 17 Aug 2023, 0000Z, this chart may no longer be valid

COPTER

STRAIGHT-IN RWY		DA(H) / MDA(H)	RVR (ALS/ALS out)
10L	ILS	326′ (200′)	R500m / R1000m
	LOC	580′ (454′)	R1000m / R1000m
	RNP	440′ (314′)	R800m / R1400m❶
	VOR TAC	540′ (414′)	R800m / R1000m
28R	ILS	341′ (200′)	R500m / R1000m
	LOC	590′ (449′)	R800m / R1000m
	RNP	580′ (439′)	R1300m / R1500m❷
	VOR TAC	720′ (579′)	R1000m / R1000m

❶Ceiling 400′.
❷Ceiling 500′.

CIRCLE-TO-LAND ❸	MDA(H)	VIS
	640′ (499′)	V1000m
VOR TAC 28R	770′ (629′)	V1000m

❸After RNP 10L/28R: NOT APPLICABLE.

TAKE-OFF RWY 10L/R, 28L/R

Low Visibility Take-off ❹				
RL/FATO, LTS RCLM & RVR info	RL/FATO LTS & RCLM	Unlit/unmarked defined RWY/FATO	Nil Facilities DAY	Nil Facilities NIGHT
R150m	R200m	R200m	R250m ❺	R/V800m

❹Without Low Visibility Take-off approval 400m are stipulated.
❺Or rejected take-off distance whichever is the greater.

© JEPPESEN, 2002, 2023 ALL RIGHTS RESERVED.

Printed from JeppView for Windows 5.3.0.0 on 28 Aug 2025; Terminal chart data cycle 16-2023 (Expired); Notice: After 17 Aug 2023, 0000Z, this chart may no longer be valid

EKSP/SKS
SKRYDSTRUP

JEPPESEN
20 JAN 23 (11-1) Eff 26 Jan

VOJENS, DENMARK
ILS Rwy 10L

BRIEFING STRIP™

ATIS	SKRYDSTRUP Approach	SKRYDSTRUP Tower
133.9	124.1	118.275

For UHF see MIL-101 listing

LOC ISPA	Final Apch Crs	D7.3 ISPA	ILS DA(H)	Apt Elev 141′
109.35	103°	2000′ (1874′)	326′ (200′)	Rwy 126′

MISSED APCH: Climb STRAIGHT AHEAD to 2000′ and join holding at Lctr.

Alt Set: hPa Rwy Elev: 5 hPa Trans level: By ATC Trans alt: 3000′

DME required.

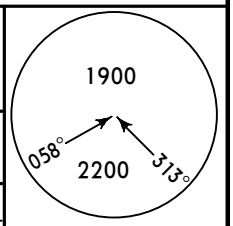

MSA SKR VOR

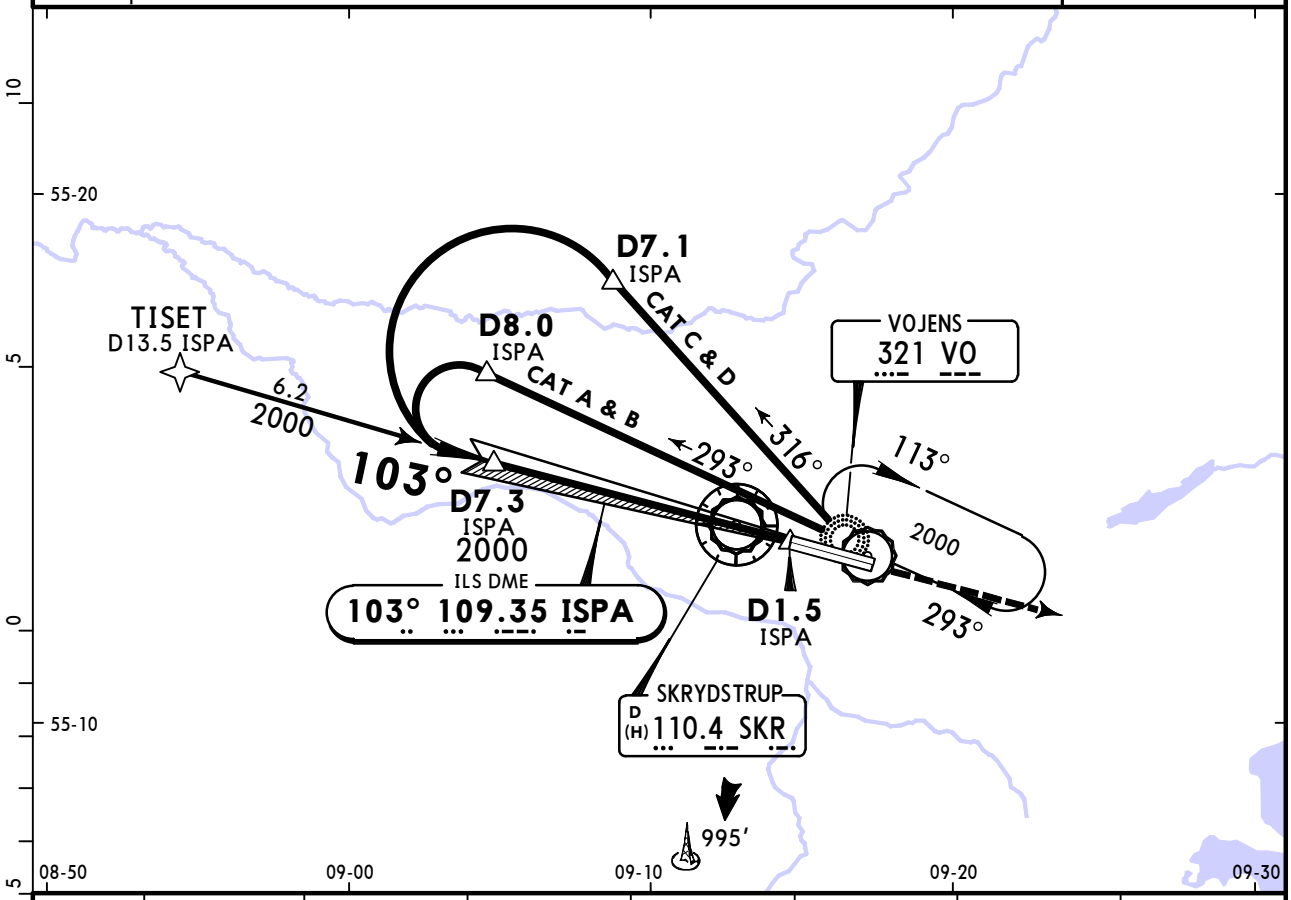

LOC (GS out)							
	ISPA DME	7.0	6.0	5.0	4.0	3.0	2.0
	ALTITUDE	1930′	1610′	1290′	970′	650′	340′

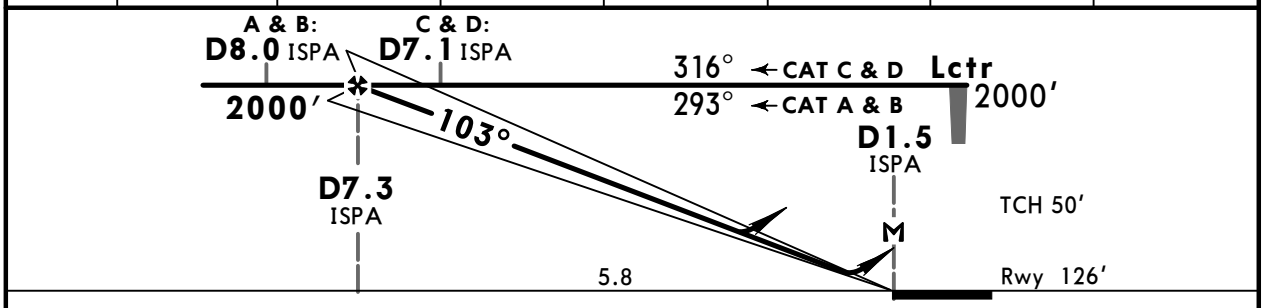

Gnd speed-Kts		70	90	100	120	140	160
GS	3.00°	372	478	531	637	743	849
MAP at D1.5 ISPA							

HIALS
PAPI PAPI
2000′

Standard STRAIGHT-IN LANDING RWY 10L

	ILS DA(H) 326′ (200′) FULL	ILS DA(H) 326′ (200′) ALS out	LOC (GS out) CDFA DA/MDA(H) 580′ (454′)	LOC (GS out) CDFA DA/MDA(H) 580′ (454′) ALS out
A	RVR 550m [1]	RVR 1200m	RVR 1400m	RVR 1500m
B				
C				RVR 2100m
D				

CIRCLE-TO-LAND

Max Kts	MDA(H)	VIS
100	640′ (499′)	1500m
135	700′ (559′)	1600m
180	800′ (659′)	2400m
205	890′ (749′)	3600m

[1] W/o HUD/AP/FD: RVR 750m.

PANS OPS

CHANGES: Requirement note added.

© JEPPESEN, 2008, 2023. ALL RIGHTS RESERVED.

Printed from JeppView for Windows 5.3.0.0 on 28 Aug 2025; Terminal chart data cycle 16-2023 (Expired); Notice: After 17 Aug 2023, 0000Z, this chart may no longer be valid

EKSP/SKS
SKRYDSTRUP

JEPPESEN
20 JAN 23 (11-2) Eff 26 Jan

VOJENS, DENMARK
ILS Rwy 28R

BRIEFING STRIP ™

ATIS	SKRYDSTRUP Approach	SKRYDSTRUP Tower
133.9	124.1	118.275

For UHF see MIL-101 listing

LOC SRY	Final Apch Crs	D6.4 SRY	ILS DA(H)	Apt Elev 141′
109.35	283°	2200′ (2059′)	341′ (200′)	Rwy 141′

MISSED APCH: Climb STRAIGHT AHEAD to 2200′ and join holding at Lctr.

Alt Set: hPa | Rwy Elev: 5 hPa | Trans level: By ATC | Trans alt: 3000′

DME required.

MSA SKR VOR: 1900 (058° – 313°), 2200

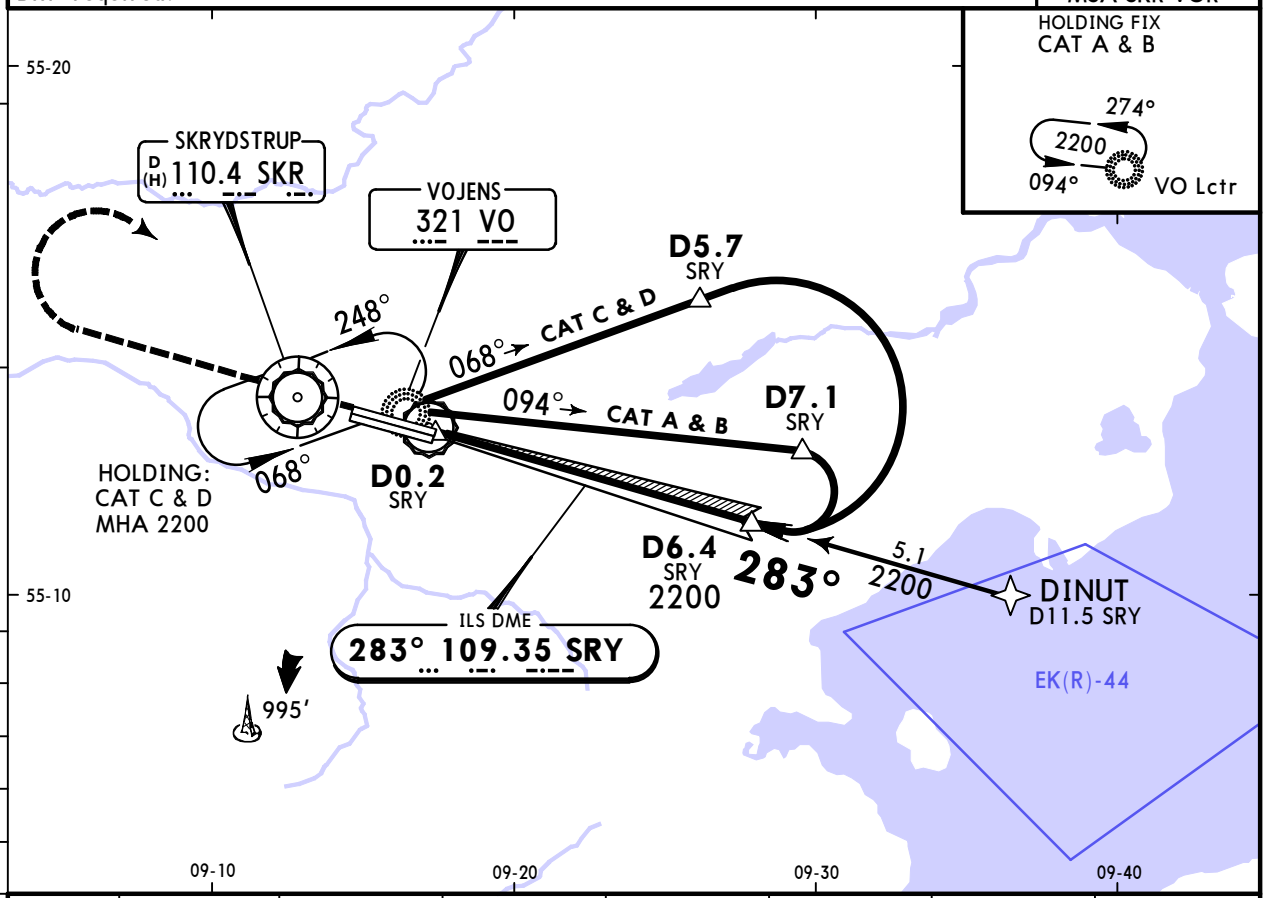

LOC (GS out)	SRY DME	1.0	2.0	3.0	4.0	5.0	6.0
	ALTITUDE	440′	760′	1070′	1390′	1710′	2030′

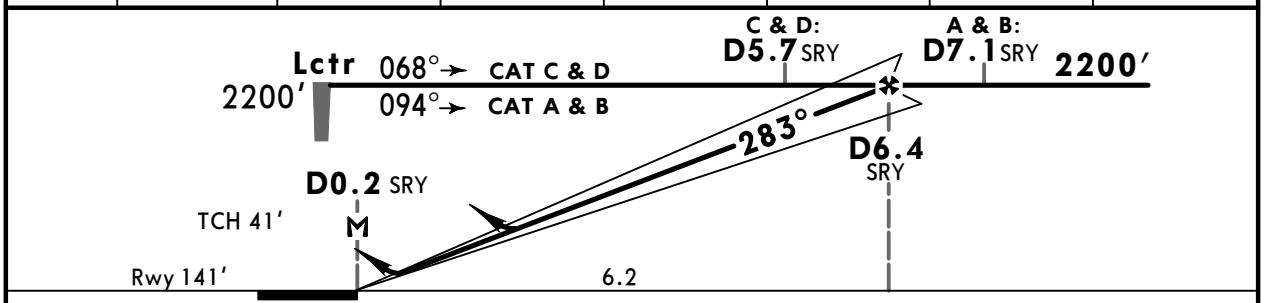

Gnd speed-Kts		70	90	100	120	140	160
GS	3.00°	372	478	531	637	743	849
MAP at D0.2 SRY							

HIALS
PAPI PAPI
2200′

Standard STRAIGHT-IN LANDING RWY **28R**

	ILS DA(H) 341′ (200′) FULL	ILS DA(H) 341′ (200′) ALS out	LOC (GS out) CDFA DA/MDA(H) 590′ (449′)	LOC (GS out) CDFA DA/MDA(H) 590′ (449′) ALS out
A	RVR 550m [1]	RVR 1200m	RVR 1400m	RVR 1500m
B				
C				RVR 2100m
D				

[1] W/o HUD/AP/FD: RVR 750m.

CIRCLE-TO-LAND

Max Kts	MDA(H)	VIS
100	640′ (499′)	1500m
135	700′ (559′)	1600m
180	800′ (659′)	2400m
205	890′ (749′)	3600m

PANS OPS

CHANGES: Requirement note added.

© JEPPESEN, 1999, 2023. ALL RIGHTS RESERVED.

Printed from JeppView for Windows 5.3.0.0 on 28 Aug 2025; Terminal chart data cycle 16-2023 (Expired); Notice: After 17 Aug 2023, 0000Z, this chart may no longer be valid

EKSP/SKS
SKRYDSTRUP

JEPPESEN
17 MAR 23
Eff 23 Mar
11-3

VOJENS, DENMARK
ILS or LOC Z Rwy 10L

BRIEFING STRIP™

ATIS	SKRYDSTRUP Approach	SKRYDSTRUP Tower
133.9	124.1	118.275

For UHF see MIL-101 listing

LOC ISPA	Final Apch Crs	GS	ILS DA(H)	Apt Elev 141′
109.35	**101°**	No Altitude published	**326′** (200′)	Rwy 126′

MISSED APCH: Climb to 2000′ on R-101 SKR TAC to D8.0 SKR TAC and join holding East.

Alt Set: hPa Rwy Elev: 5 hPa Trans level: By ATC Trans alt: 3000′

1. DME required. 2. Radar vectors to final required.

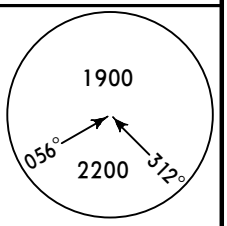

MSA SKR VOR

CAUTION: The DME indications are from VORTAC SKR - Not from the DME associated with the ILS.

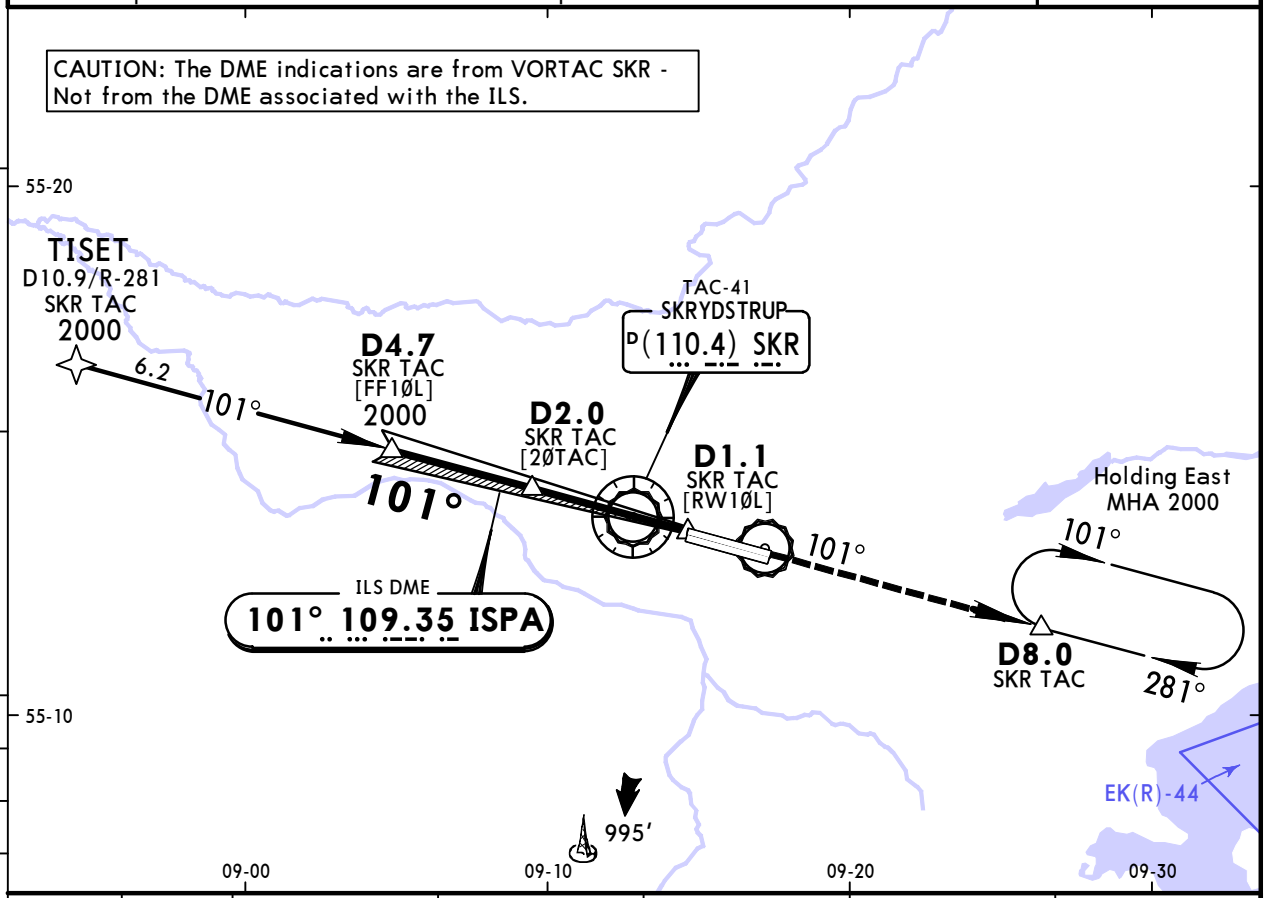

LOC (GS out)	SKR TAC	3.9	2.9	1.9	0.9	0.1
	ALTITUDE	1770′	1450′	1140′	820′	500′

LOC (GS out): Do not pass D2.0 SKR TAC below 600′.

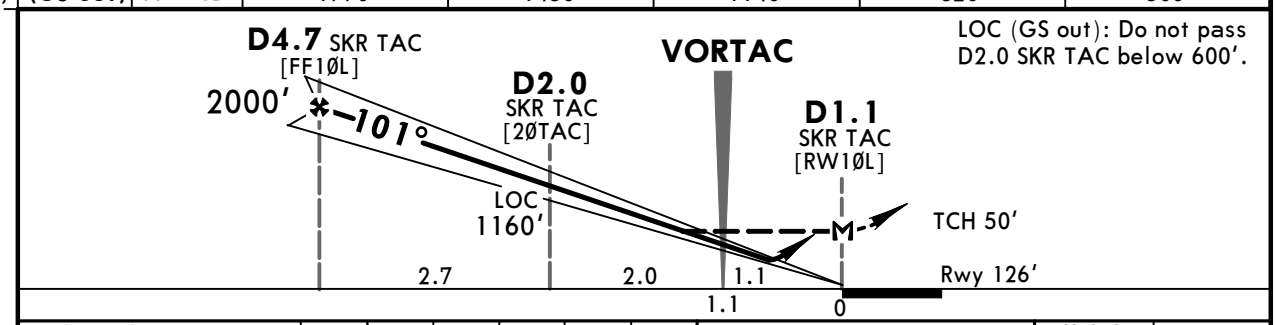

Gnd speed-Kts		70	90	100	120	140	160
ILS GS or LOC Descent Angle	3.00°	372	478	531	637	743	849
MAP at D1.1 SKR TAC							

HIALS
PAPI PAPI
2000′

Military STRAIGHT-IN LANDING RWY **10L** **CEILING REQUIRED** CIRCLE-TO-LAND

	ILS DA(H) **326′** (200′) FULL	ILS DA(H) **326′** (200′) ALS out	LOC (GS out) MDA(H) **410′** (284′)	LOC (GS out) MDA(H) **410′** (284′) ALS out
A	200′ - RVR 550m VIS 800m	200′ - 1200m	300′ - RVR 750m VIS 800m	300′ - 1400m
B				
C				
D				

Max Kts	MDA(H)	CEIL-VIS
100	**630′** (489′)	500′ - 1500m
135	**700′** (559′)	600′ - 1600m
180	**800′** (659′)	700′ - 2400m
205	**890′** (749′)	800′ - 3600m

MIPS MIL

CHANGES: Bearings.

© JEPPESEN, 2016, 2023. ALL RIGHTS RESERVED.

Printed from JeppView for Windows 5.3.0.0 on 28 Aug 2025; Terminal chart data cycle 16-2023 (Expired); Notice: After 17 Aug 2023, 0000Z, this chart may no longer be valid

EKSP/SKS
SKRYDSTRUP

JEPPESEN
17 MAR 23
Eff 23 Mar
11-4

VOJENS, DENMARK
ILS or LOC Z Rwy 28R

ATIS	SKRYDSTRUP Approach	SKRYDSTRUP Tower
133.9	124.1	118.275

For UHF see MIL-101 listing

BRIEFING STRIP™

LOC	Final	GS	ILS	
SRY	Apch Crs	No Altitude published	DA(H)	Apt Elev 141′
109.35	**281°**		**341′**(200′)	Rwy 141′

MISSED APCH: Climb on track 281° to 2000′. Inform ATC.
MISSED APCH WITH COMM FAILURE: Inititate climb to 2000′ on track 281°. When passing 1000′ turn LEFT inbound D8.4/R-101 SKR TAC and hold.

Alt Set: hPa Rwy Elev: 5 hPa Trans level: By ATC Trans alt: 3000′

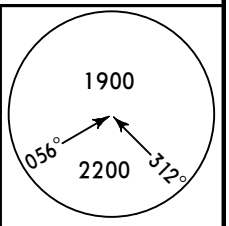

MSA SKR VOR

DME required.
Radar vectors to final required.

CAUTION: The DME indications are from VORTAC SKR - Not from the DME associated with the ILS.

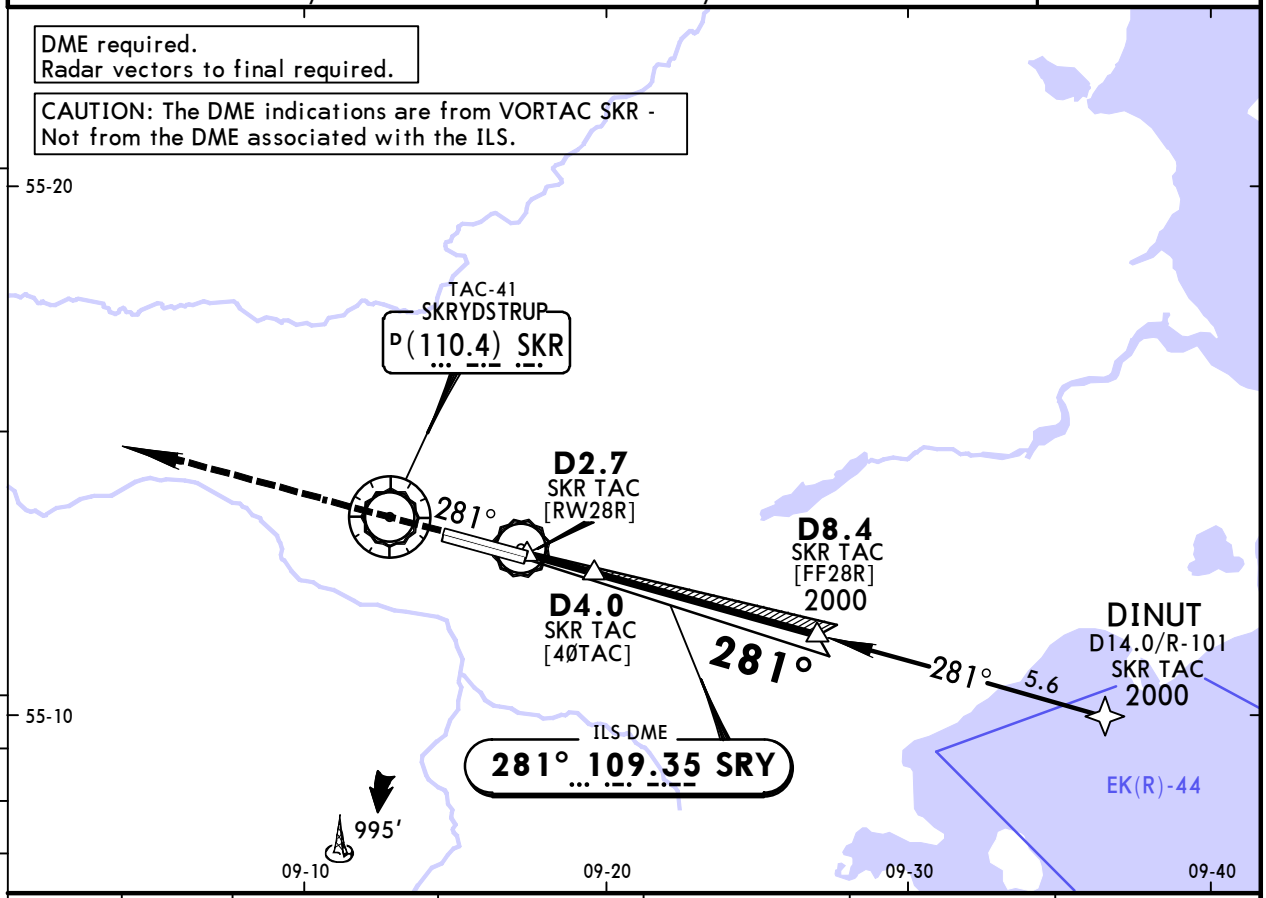

LOC (GS out)	SKR TAC	3.7	4.7	5.7	6.7	7.7
	ALTITUDE	500′	820′	1140′	1460′	1780′

LOC (GS out): Do not pass D4.0 SKR TAC below 580′.

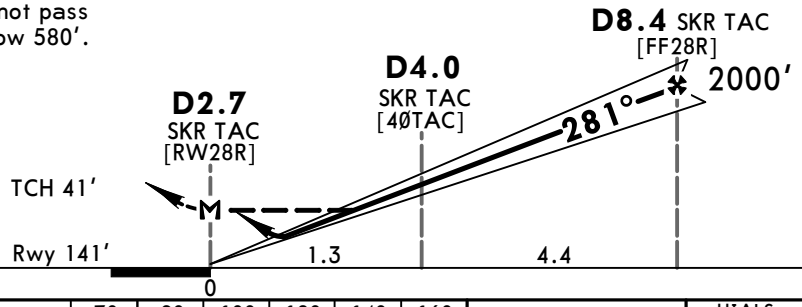

Gnd speed-Kts		70	90	100	120	140	160
ILS GS or LOC Descent Angle	3.00°	372	478	531	637	743	849
MAP at D2.7 SKR TAC							

HIALS
PAPI PAPI
2000′ on 281°

Military STRAIGHT-IN LANDING RWY **28R** **CEILING REQUIRED** CIRCLE-TO-LAND

	ILS DA(H) 341′(200′) FULL	ILS DA(H) 341′(200′) ALS out	LOC (GS out) MDA(H) 470′(329′)	LOC (GS out) MDA(H) 470′(329′) ALS out
A	200′ - RVR 550m VIS 800m	200′ - 1200m	400′ - 800m	400′ - 1500m
B				
C				
D				

Max Kts	MDA(H)	CEIL-VIS
100	630′ (489′)	500′ - 1500m
135	700′ (559′)	600′ - 1600m
180	800′ (659′)	700′ - 2400m
205	890′ (749′)	800′ - 3600m

MIPS MIL

CHANGES: Bearings.

© JEPPESEN, 2016, 2023. ALL RIGHTS RESERVED.

Printed from JeppView for Windows 5.3.0.0 on 28 Aug 2025; Terminal chart data cycle 16-2023 (Expired); Notice: After 17 Aug 2023, 0000Z, this chart may no longer be valid

EKSP/SKS
SKRYDSTRUP

JEPPESEN
17 MAR 23
Eff 23 Mar
(12-1)

VOJENS, DENMARK
RNP Rwy 10L

ATIS	SKRYDSTRUP Approach		SKRYDSTRUP Tower
133.9	315.1	124.1	118.275

For UHF see MIL-101 listing

BRIEFING STRIP ™

RNAV	Final Apch Crs	SP1Ø1	MDA(H) Refer to Minimums	Apt Elev 141′ Rwy 126′
	101°	2000′ (1874′)		

MISSED APCH RNP: Climb on track 101° to 2000′ to SP1ØE and join holding East.
NON-RNP: Climb on R-101 to 2000′ to D8.0 and join holding East.

RNP Apch | Alt Set: hPa | Rwy Elev: 5 hPa | Trans level: By ATC | Trans alt: 3000′

CAUTION: IAF NIREK not available when EK(R)-38 is active.

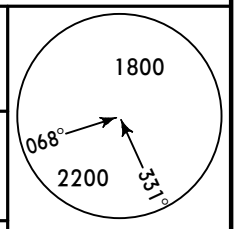

MSA ARP

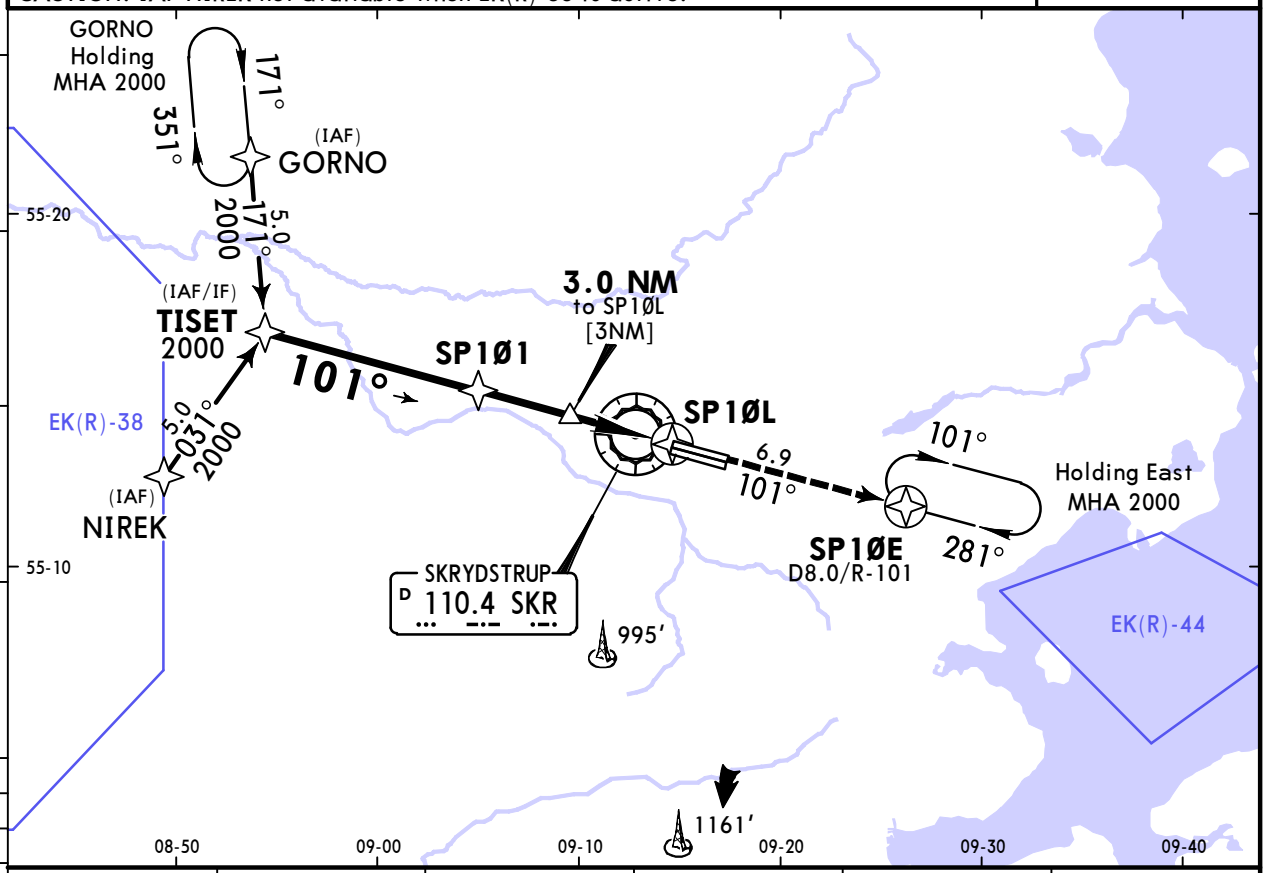

DIST to SP1ØL	5.0	4.0	3.0	2.0	1.0
ALTITUDE	1770′	1450′	1130′	820′	500′

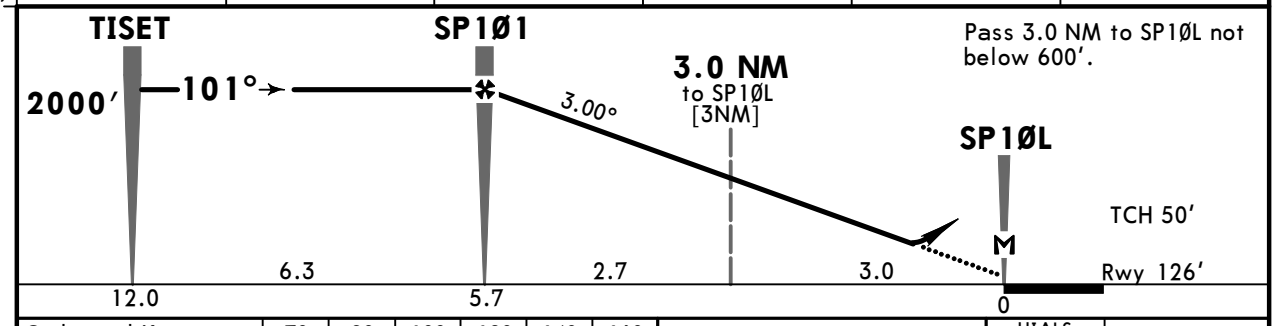

Pass 3.0 NM to SP1ØL not below 600′.

Gnd speed-Kts		70	90	100	120	140	160
Descent Angle	3.00°	372	478	531	637	743	849
MAP at SP1ØL							

HIALS
PAPI PAPI

Refer to Missed Apch above

Standard STRAIGHT-IN LANDING RWY **10L** **CEILING REQUIRED** CIRCLE-TO-LAND

LNAV
CDFA
MDA(H) AB: **440′** (314′) CD: **450′** (324′)

MIPS MIL

		ALS out
A	400′ - RVR 750m VIS 800m	400′ - 1400m
B		
C	400′ - 800m	400′ - 1500m
D		

Max Kts	MDA(H)	CEIL-VIS
100	630′ (489′)	500′ - 1500m
135	700′ (559′)	600′ - 1600m
180	800′ (659′)	700′ - 2400m
205	890′ (749′)	800′ - 3600m

CHANGES: Bearings.

© JEPPESEN, 2010, 2023. ALL RIGHTS RESERVED.

Printed from JeppView for Windows 5.3.0.0 on 28 Aug 2025; Terminal chart data cycle 16-2023 (Expired); Notice: After 17 Aug 2023, 0000Z, this chart may no longer be valid

EKSP/SKS
SKRYDSTRUP

JEPPESEN
17 MAR 23
Eff 23 Mar
(12-2)

VOJENS, DENMARK
RNP Rwy 28R

ATIS	SKRYDSTRUP Approach		SKRYDSTRUP Tower
133.9	315.1	124.1	118.275

For UHF see MIL-101 listing

BRIEFING STRIP ™

RNAV	Final Apch Crs	SP281 MANDATORY	MDA(H)	Apt Elev 141′
	281°	2000′ (1859′)	580′ (439′)	Rwy 141′

MISSED APCH RNP: Climb on track 281° to 2000′ to SP28W and join holding West.
NON-RNP: Climb on R-281 to 2000′ to D4.7 and join holding West.

RNP Apch | Alt Set: hPa | Rwy Elev: 5 hPa | Trans level: By ATC | Trans alt: 3000′

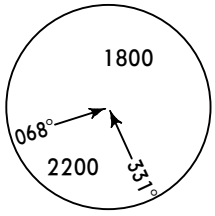

MSA ARP

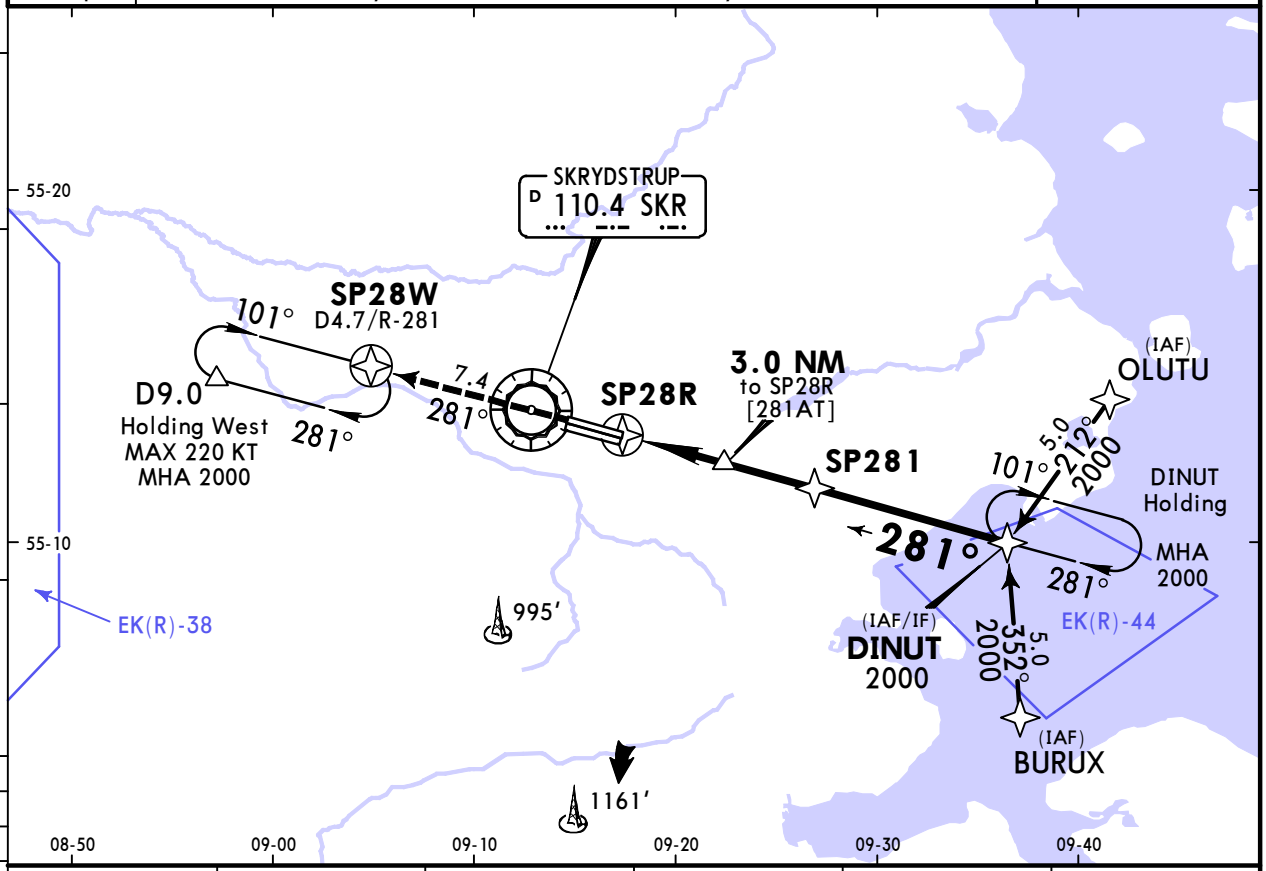

DIST to SP28R	1.3	2.0	3.0	4.0	5.0
ALTITUDE	580′	820′	1140′	1460′	1780′

Pass 3.0 NM to SP28R not below 650′.

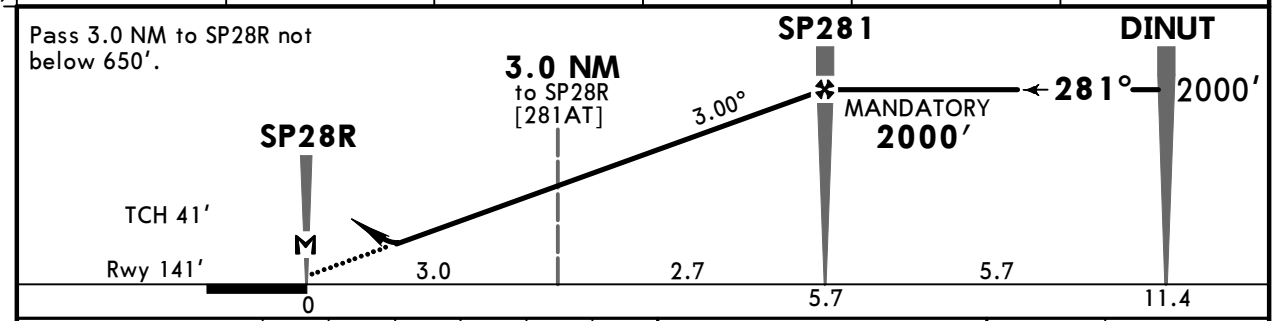

Gnd speed-Kts		70	90	100	120	140	160
Descent Angle	3.00°	372	478	531	637	743	849
MAP at SP28R							

HIALS
PAPI PAPI

Refer to Missed Apch above

Standard STRAIGHT-IN LANDING RWY **28R** **CEILING REQUIRED** CIRCLE-TO-LAND

LNAV
CDFA
MDA(H) **580′** (439′)

		ALS out	Max Kts	MDA(H)	CEIL-VIS
A	500′ - 1300m	500′ - 1500m	100	630′ (489′)	500′ - 1500m
B			135	700′ (559′)	600′ - 1600m
C		500′ - 2000m	180	800′ (659′)	700′ - 2400m
D			205	890′ (749′)	800′ - 3600m

MIPS MIL

CHANGES: Bearings.

© JEPPESEN, 2010, 2023. ALL RIGHTS RESERVED.

Printed from JeppView for Windows 5.3.0.0 on 28 Aug 2025; Terminal chart data cycle 16-2023 (Expired); Notice: After 17 Aug 2023, 0000Z, this chart may no longer be valid

EKSP/SKS
SKRYDSTRUP

JEPPESEN

20 JAN 23 (13-1) Eff 26 Jan

VOJENS, DENMARK
VOR Rwy 10L

ATIS	SKRYDSTRUP Approach	SKRYDSTRUP Tower
133.9	124.1	118.275

For UHF see MIL-101 listing

BRIEFING STRIP ™

VOR SKR	Final Apch Crs	D4.7	DA/MDA(H)	Apt Elev 141′
110.4	103°	2000′(1874′)	540′(414′)	Rwy 126′

MISSED APCH: Climb on R-103 to 2000′ to D8.0 and hold.

Alt Set: hPa Rwy Elev: 5 hPa Trans level: By ATC Trans alt: 3000′

DME required.

MSA SKR VOR: 1900 (058°–313°), 2200

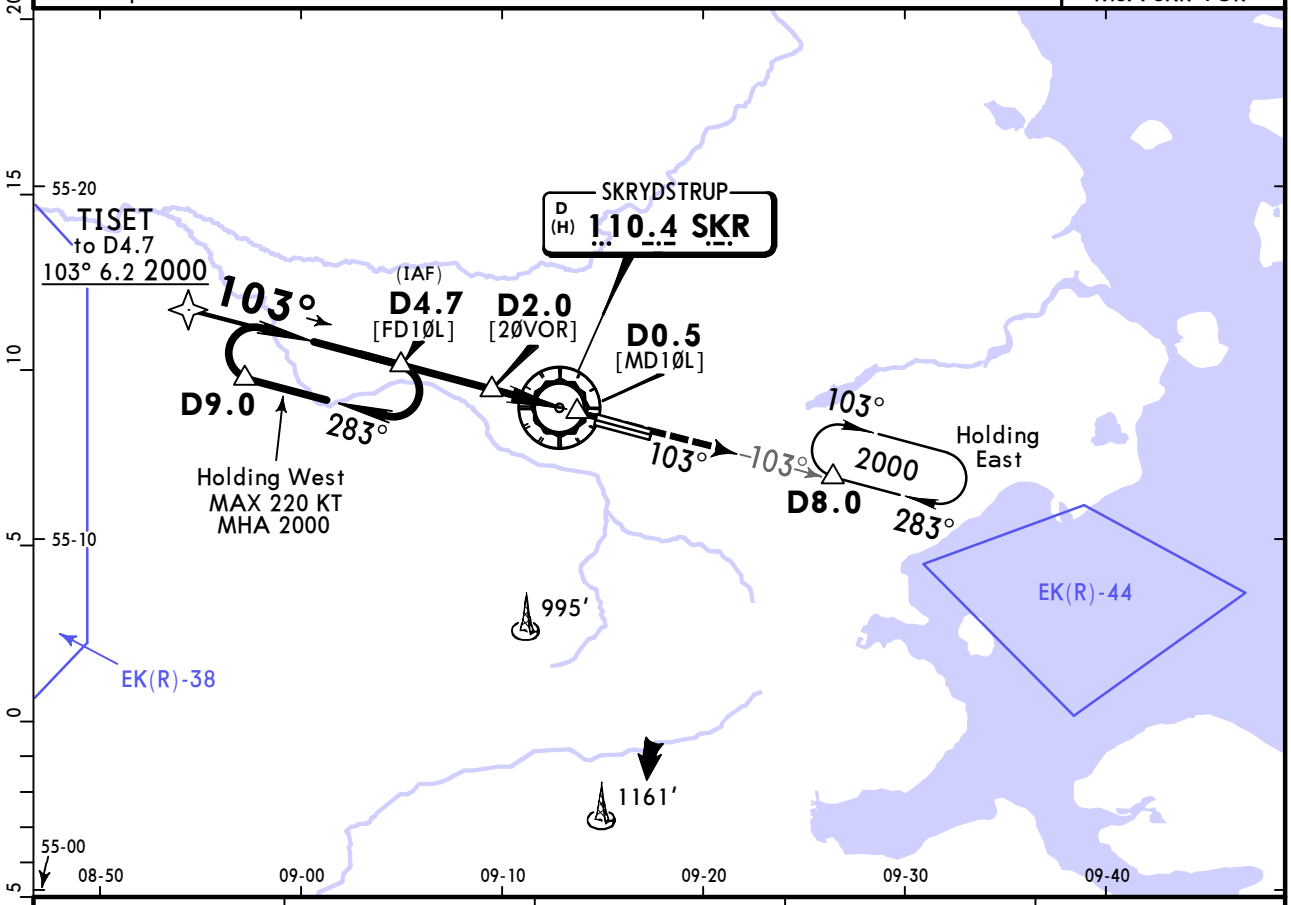

SKR DME	4.0	3.0	2.0	1.0
ALTITUDE	1790′	1470′	1150′	830′

Do not pass D2.0 below 600′.

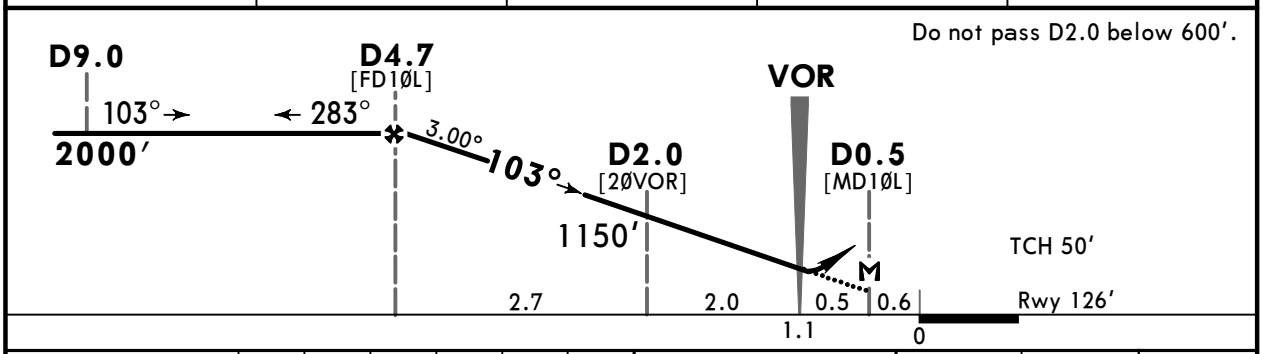

Gnd speed-Kts		70	90	100	120	140	160
Descent Angle	3.00°	372	478	531	637	743	849
MAP at D0.5							

HIALS PAPI PAPI

2000′ SKR on 110.4 R-103

Standard STRAIGHT-IN LANDING RWY 10L

CDFA DA/MDA(H) 540′(414′)

PANS OPS		ALS out
A	RVR 1200m	RVR 1500m
B		
C		RVR 1900m
D		

CIRCLE-TO-LAND

Max Kts	MDA(H)	VIS
100	640′(499′)	1500m
135	790′(649′)	1600m
180	1030′(889′)	2400m
205	1030′(889′)	3600m

CHANGES: Procedure title, requirement note added.

© JEPPESEN, 1999, 2023. ALL RIGHTS RESERVED.

Printed from JeppView for Windows 5.3.0.0 on 28 Aug 2025; Terminal chart data cycle 16-2023 (Expired); Notice: After 17 Aug 2023, 0000Z, this chart may no longer be valid

EKSP/SKS
SKRYDSTRUP

JEPPESEN

26 MAY 23 (13-1-0) CAT C, D & E

VOJENS, DENMARK
HI-VORTAC Rwy 10L

ATIS	SKRYDSTRUP Approach	SKRYDSTRUP Tower	COPENHAGEN Control
133.9	315.1 124.1	286.375 118.275	360.1 133.155

BRIEFING STRIP ™

VORTAC SKR	Final Apch Crs	D4.7 SKR	MDA(H)	Apt Elev 141′
110.4 (CH 41X)	101°	2000 (1874′)	430′ (304′)	Rwy 126′

MISSED APCH: Initial climb to 2000′. Follow SKR VORTAC R-101. At D8.0 SKR VORTAC join holding East.

Alt Set: hPa Rwy Elev: 5 hPa Trans level: By ATC Trans alt: 3000′

1. DME required. 2. Max procedure speed 300 KT. 3. EMERG SAFE ALT 100 NM 2400′.

MSA SKR VORTAC: 1900 (056°–312°), 2200

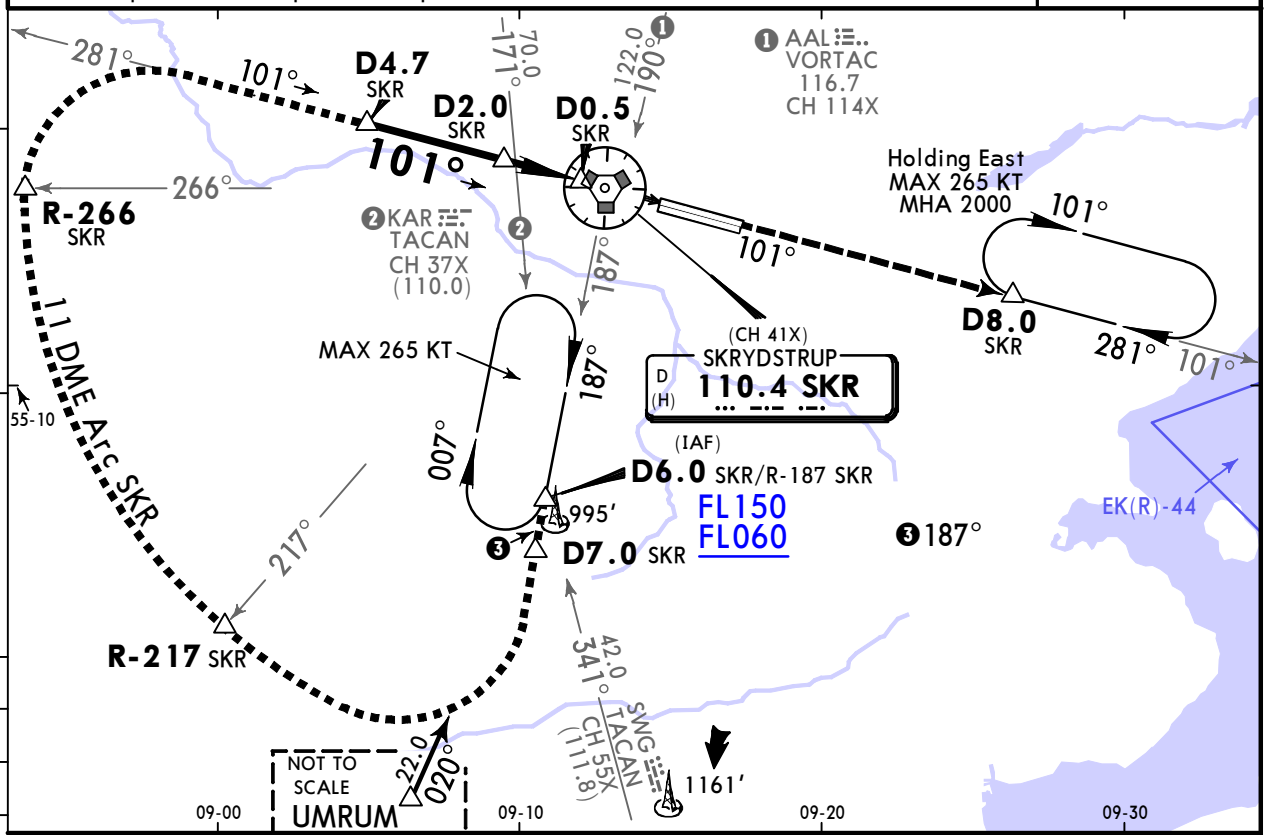

SKR DME	4.0	3.0	2.0	1.0	0.0
DIST to THR	5.1	4.1	3.1	2.1	1.1
ALTITUDE	1790′	1470′	1150′	830′	520′

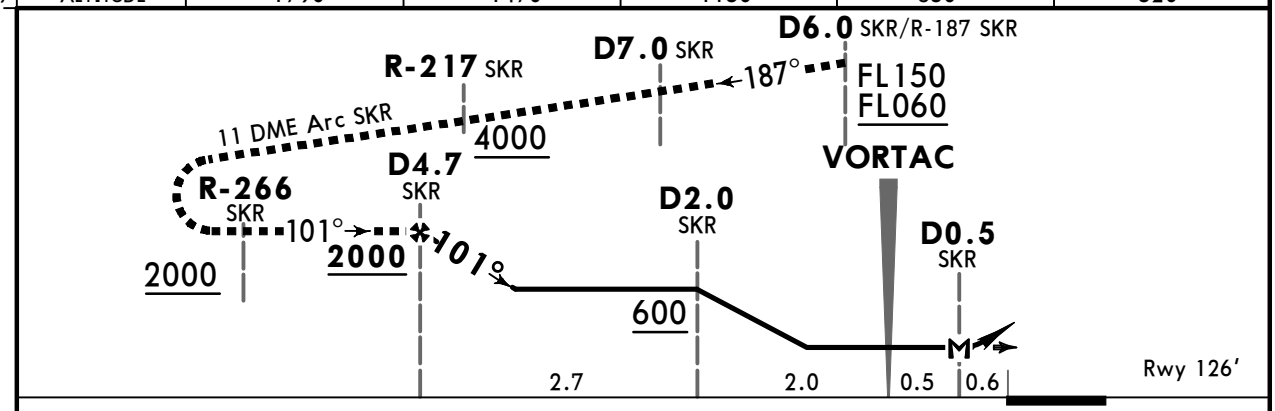

Gnd speed-Kts		70	90	100	120	140	160
Descent Angle	3.00°	372	478	531	637	743	849
MAP at D0.5 SKR							

HIALS PAPI PAPI

2000′ on SKR 110.4 CH 41X R-101

MIPS MIL

Military STRAIGHT-IN LANDING — MDA(H) 430′ (304′)

	ALS out	
A	NOT APPLICABLE	
B		
C	400′- V0.8km	400′- V1.4km
D		
E		

❶ SIDESTEP LANDING RWY 10L — MDA(H) 530′ (406′)

CEIL-VIS: C-130/CL-604: 500′- V1.9km; F-16: 500′- V2.8km

CIRCLE-TO-LAND

Max Kts	MDA(H)	
A	NOT APPLICABLE	
B		
180	800′ (659′)	700′- V2.4km
205	890′ (749′)	800′- V3.6km
E	1490′ (1349′)	1400′- V3.6km

❶ RDAF acft only

CHANGES: COPENHAGEN Control frequency.

© JEPPESEN, 2022, 2023. ALL RIGHTS RESERVED.

Printed from JeppView for Windows 5.3.0.0 on 28 Aug 2025; Terminal chart data cycle 16-2023 (Expired); Notice: After 17 Aug 2023, 0000Z, this chart may no longer be valid

EKSP/SKS
SKRYDSTRUP

JEPPESEN

20 JAN 23 (13-2) Eff 26 Jan

VOJENS, DENMARK
VOR Rwy 28R

ATIS	SKRYDSTRUP Approach	SKRYDSTRUP Tower
133.9	124.1	118.275

For UHF see MIL-101 listing

BRIEFING STRIP ™

VOR SKR	Final Apch Crs	D8.4	DA/MDA(H)	Apt Elev 141′
110.4	283°	2000′(1859′)	720′(579′)	Rwy 141′

MISSED APCH: Climb on track 283° to 2000′. Contact ATC.
MISSED APCH WITH COMM FAILURE: Climb on track 283° to 2000′. When passing 1000′ turn LEFT inbound IAF and hold.

Alt Set: hPa Rwy Elev: 5 hPa Trans level: By ATC Trans alt: 3000′

DME required.

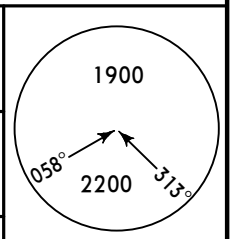

MSA SKR VOR

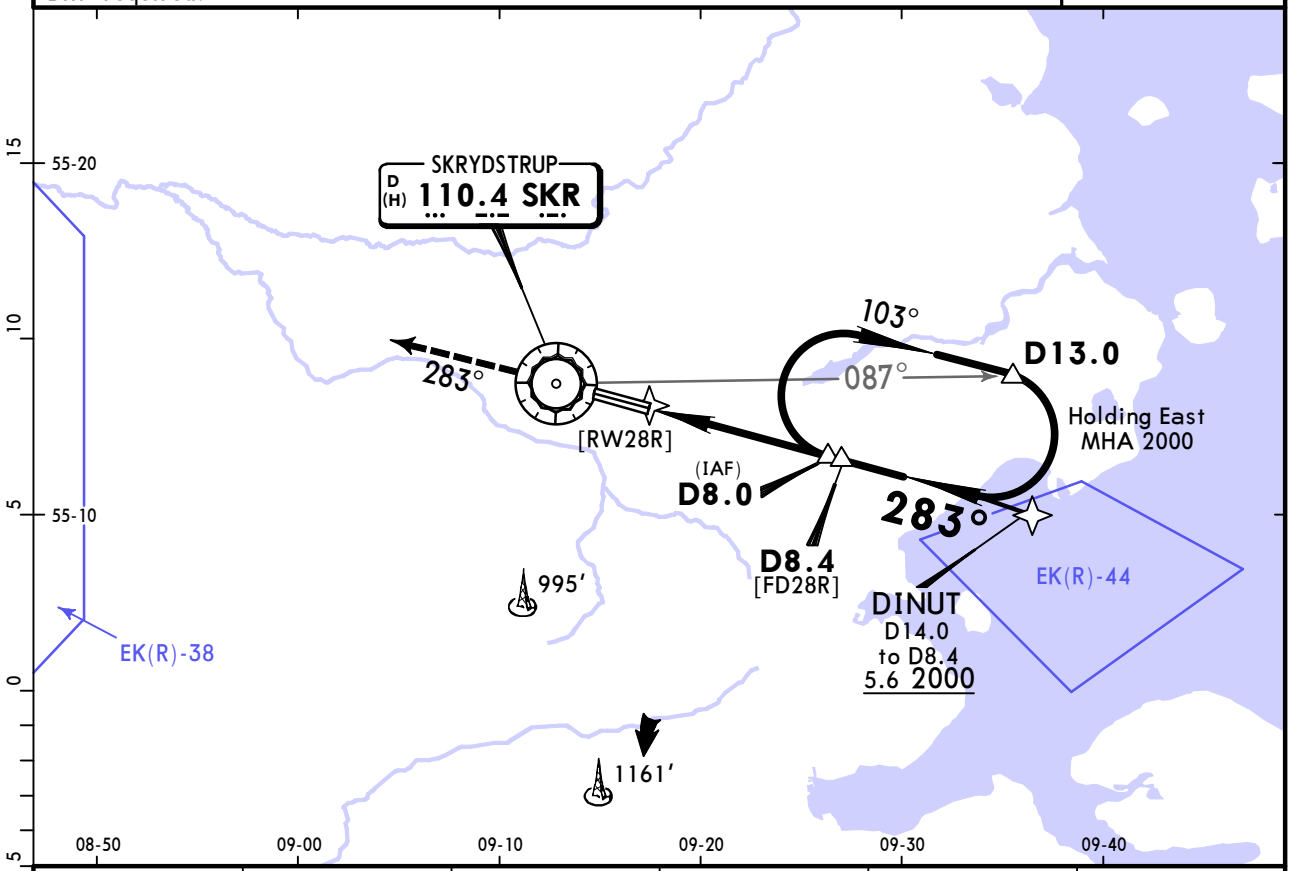

SKR DME	4.0	5.0	6.0	7.0	8.0
ALTITUDE	610′	930′	1250′	1560′	1880′

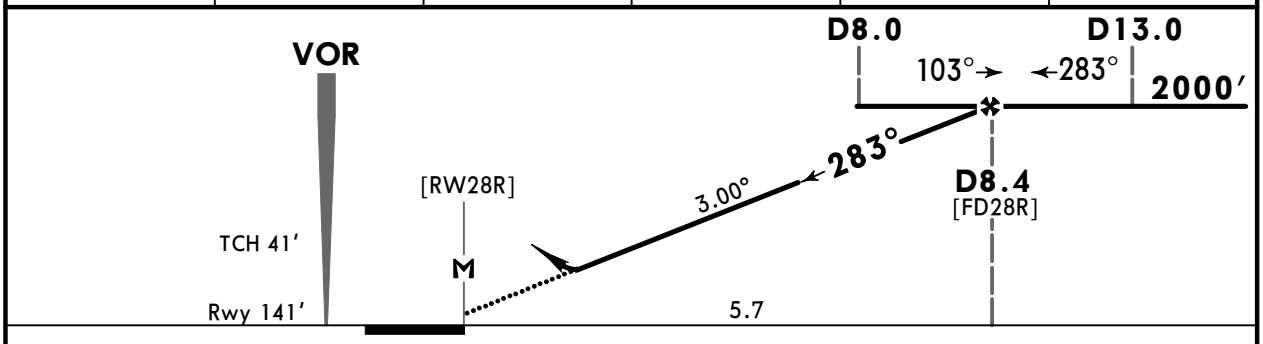

Gnd speed-Kts		70	90	100	120	140	160
Descent angle	3.00°	372	478	531	637	743	849
FAF to MAP	5.7	4:53	3:48	3:25	2:51	2:27	2:08

HIALS
PAPI PAPI
2000′ on 283°

Standard STRAIGHT-IN LANDING RWY **28R**

CDFA
DA/MDA(H) **720′**(579′)

		ALS out
A	RVR 1500m	
B		
C	RVR 1900m	RVR 2400m
D		

CIRCLE-TO-LAND

Max Kts	MDA(H)	VIS
100	770′(629′)	1500m
135	850′(709′)	1600m
180	950′(809′)	2400m
205	1040′(899′)	3600m

PANS OPS

CHANGES: Procedure title, requirement note added.

© JEPPESEN, 1999, 2023. ALL RIGHTS RESERVED.

Printed from JeppView for Windows 5.3.0.0 on 28 Aug 2025; Terminal chart data cycle 16-2023 (Expired); Notice: After 17 Aug 2023, 0000Z, this chart may no longer be valid

EKSP/SKS SKRYDSTRUP

JEPPESEN

26 MAY 23 (13-2-0) CAT C, D & E

VOJENS, DENMARK HI-VORTAC Rwy 28R

ATIS	SKRYDSTRUP Approach	SKRYDSTRUP Tower	COPENHAGEN Control
133.9	315.1 124.1	286.375 118.275	360.1 133.155

BRIEFING STRIP ™

VORTAC SKR	Final Apch Crs	D8.4 SKR	MDA(H)	Apt Elev 141′
110.4 (CH 41X)	281°	2000 (1859′)	580′ (439′)	Rwy 141′

MISSED APCH: Climb on track 281° to 2000′. Contact ATC.
MISSED APCH WITH COMM FAILURE: Climb to 2000′ on track 281°. When passing 1000′ turn LEFT SKR VORTAC R-101/D8.4 and hold. Squawk 7600.

Alt Set: hPa Rwy Elev: 5 hPa Trans level: By ATC Trans alt: 3000′

1. DME required. 2. Max procedure speed 300 KT. 3. EMERG SAFE ALT 100 NM 2400′.

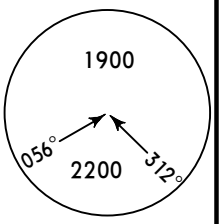

MSA SKR VORTAC

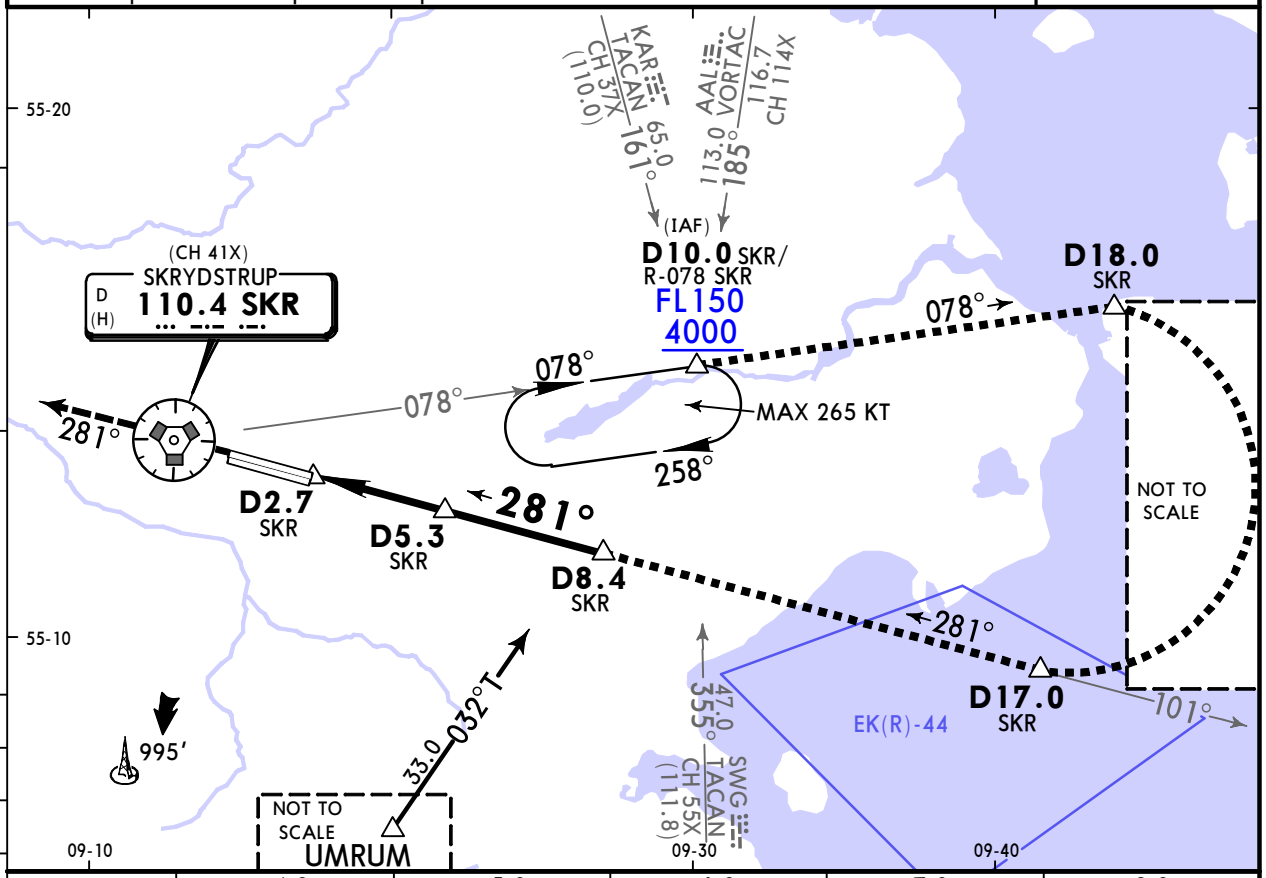

SKR DME	4.0	5.0	6.0	7.0	8.0
DIST to THR	1.3	2.3	3.3	4.3	5.3
ALTITUDE	610′	930′	1250′	1560′	1880′

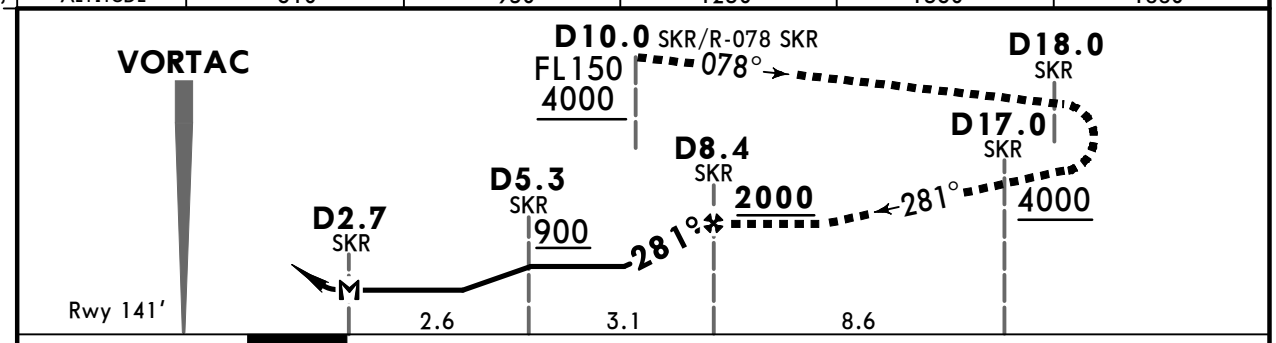

Gnd speed-Kts		70	90	100	120	140	160
Descent Angle	3.00°	372	478	531	637	743	849
MAP at 2.7 SKR							

HIALS PAPI PAPI

2000′ on SKR 110.4 CH 41X R-281

Military STRAIGHT-IN LANDING

MDA(H) 580′ (439′)

	ALS out	
A	NOT APPLICABLE	
B		
C	400′- V1.3km	400′- V2.0km
D		
E		

1 SIDESTEP LANDING RWY 28R

MDA(H) 580′ (441′)

CEIL-VIS
C-130/CL-604: 500′- V2.1km
F-16: 500′- V2.8km

CIRCLE-TO-LAND

Max Kts	MDA(H)	
A	NOT APPLICABLE	
B		
180	800′ (659′)	700′- V2.4km
205	890′ (749′)	800′- V3.6km
E	1490′ (1349′)	1400′- V3.6km

MIPS MIL

1 RDAF acft only

CHANGES: COPENHAGEN Control frequency.

© JEPPESEN, 2022, 2023. ALL RIGHTS RESERVED.

(c) JEPPESEN SANDERSON, INC., 2025, ALL RIGHTS RESERVED

Chart changes since cycle 15-2023

ADD = added chart, REV = revised chart, DEL = deleted chart.

ACT	PROCEDURE IDENT	INDEX	REV DATE	EFF DATE

VOJENS, (SKRYDSTRUP - EKSP)

(c) JEPPESEN SANDERSON, INC., 2025, ALL RIGHTS RESERVED

TERMINAL CHART CHANGE NOTICES

No Chart Change Notices for Airport EKSP