(c) JEPPESEN SANDERSON, INC., 2025, ALL RIGHTS RESERVED

List of pages in this Trip Kit

Trip Kit Index
Airport Information For EDDE
Terminal Charts For EDDE
Revision Letter For Cycle 16-2023
Change Notices
Notebook

(c) JEPPESEN SANDERSON, INC., 2025, ALL RIGHTS RESERVED

General Information

Location: ERFURT-WEIMAR DEU
ICAO/IATA: EDDE / ERF
Lat/Long: N50° 58.79', E010° 57.49'
Elevation: 1034 ft

Airport Use: Public
Daylight Savings: Observed
UTC Conversion: -1:00 = UTC
Magnetic Variation: 3.0° E

Fuel Types: 100 Octane (LL), Jet A-1
Customs: Yes
Airport Type: IFR
Landing Fee: Yes
Control Tower: Yes
Jet Start Unit: No
LLWS Alert: No
Beacon: No

Sunrise: 0440 Z
Sunset: 1748 Z

Runway Information

Runway: 09
Length x Width: 8530 ft x 164 ft
Surface Type: asphalt
TDZ-Elev: 1023 ft
Lighting: Edge, ALS, Centerline, REIL, TDZ

Runway: 27
Length x Width: 8530 ft x 164 ft
Surface Type: asphalt
TDZ-Elev: 1014 ft
Lighting: Edge, ALS, Centerline, REIL, TDZ
Displaced Threshold: 689 ft

Communication Information

ATIS: 133.455
Erfurt Tower: 121.155
Erfurt Ground: 121.755
Erfurt Apron Ramp/Taxi: 121.905
Munich Radar Radar: 126.175 RCO

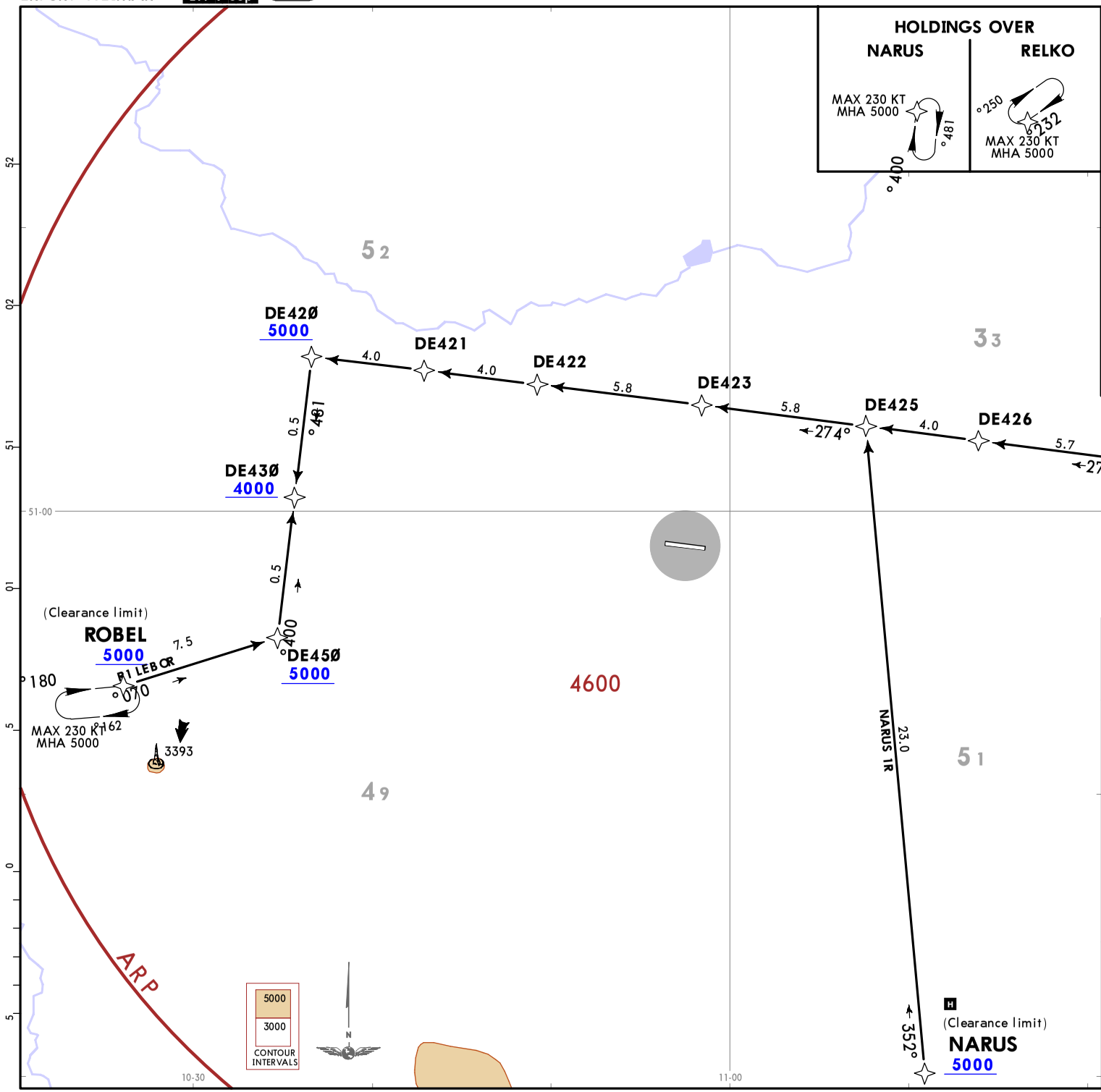

ATIS	Apt Elev
133.455	1034

Alt Set: hPa (IN on request) Trans level: By ATC
1. RNAV 1 or RNP-1 or A-RNP equivalent.
2. GPS required.
3. DME/DME, DME/DME/IRU not authorized.
4. RADAR required.
5. Procedures not to be used during activity of NLFS.
6. On downwind EXPECT vectors to final.
7. Speed and altitude restrictions are MANDATORY, unless cancelled by ATC.

NARUS 1R [NARU1R]
RELKO 1R [RELK1R]
ROBEL 1R [ROBE1R]
RNAV ARRIVALS
(RWY 09)

SPEED: MAX 250 KT BELOW FL100 OR AS BY ATC
NOT APPLICABLE WITHIN AIRSPACE C

IFR profiles within airspace Class E. Watch out for VFR traffic unknown to ATC.

LOST COMMS

If no further clearance has been received before reaching clearance limit:
Enter holding at beginning of STAR and descend to published MHA. Thereafter continue IMMEDIATELY via STAR and profile/altitudes and follow an adequate instrument approach procedure to land.

If no further clearance has been received and/or clearance limit has been passed:
Continue via STAR or previously cleared waypoints and profile/altitudes and follow adequate instrument approach procedure to land.

STAR	ROUTING
NARUS 1R	NARUS (5000+) - DE425 - DE423 - DE422 - DE421 - DE420 (5000+) - DE430 (4000+).
RELKO 1R	RELKO (5000+) - DE428 - DE426 - DE425 - DE423 - DE422 - DE421 - DE420 (5000+) - DE430 (4000+).
ROBEL 1R	ROBEL (5000+) - DE450 (5000+) - DE430 (4000+).

CHANGES: RNAV STARs established; RNAV transitions withdrawn; new format.

© JEPPESEN, 2021. ALL RIGHTS RESERVED.

Printed from JeppView for Windows 5.3.0.0 on 08 Sep 2025; Terminal chart data cycle 16-2023 (Expired); Notice: After 17 Aug 2023, 0000Z, this chart may no longer be valid

JEPPESEN 27 AUG 21 (10-2A) Eff 9 Sep

ERFURT-WEIMAR, GERMANY

RNAV STAR

LOST COMMS LOST COMMS LOST COMMS LOST COMMS

If no further clearance has been received before reaching clearance limit:
Enter holding at beginning of STAR and descend to published MHA. Thereafter continue IMMEDIATELY via STAR and profile/altitudes and follow an adequate instrument approach procedure to land.

If no further clearance has been received and/or clearance limit has been passed:
Continue via STAR or previously cleared waypoints and profile/altitudes and follow adequate instrument approach procedure to land.

LOST COMMS LOST COMMS LOST COMMS LOST COMMS

STAR	ROUTING
NARUS 1V	NARUS (5000+) - DE457 (5000+) - DE437 (4000+).
RELKO 1V	RELKO (5000+) - DE428 (5000+) - DE437 (4000+).
ROBEL 1V	ROBEL (5000+) - DE424 (7000+❶) - DE423 - DE425 - DE426 - DE428 (5000+) - DE437 (4000+).

❶ During activity of NLFS.

IFR profiles within airspace Class E. Watch out for VFR traffic unknown to ATC.

NARUS 1V [NARU1V]
RELKO 1V [RELK1V]
ROBEL 1V [ROBE1V]
RNAV ARRIVALS
(RWY 27)

SPEED: MAX 250 KT BELOW FL100 OR AS BY ATC
NOT APPLICABLE WITHIN AIRSPACE C

ATIS	Apt Elev
133.455	1034

Alt Set: hPa (IN on request) Trans level: By ATC
1. RNAV 1 or RNP-1 or A-RNP equivalent.
2. GPS required.
3. DME/DME, DME/DME/IRU not authorized.
4. RADAR required.
5. On downwind EXPECT vectors to final.
6. Speed and altitude restrictions are MANDATORY, unless cancelled by ATC.

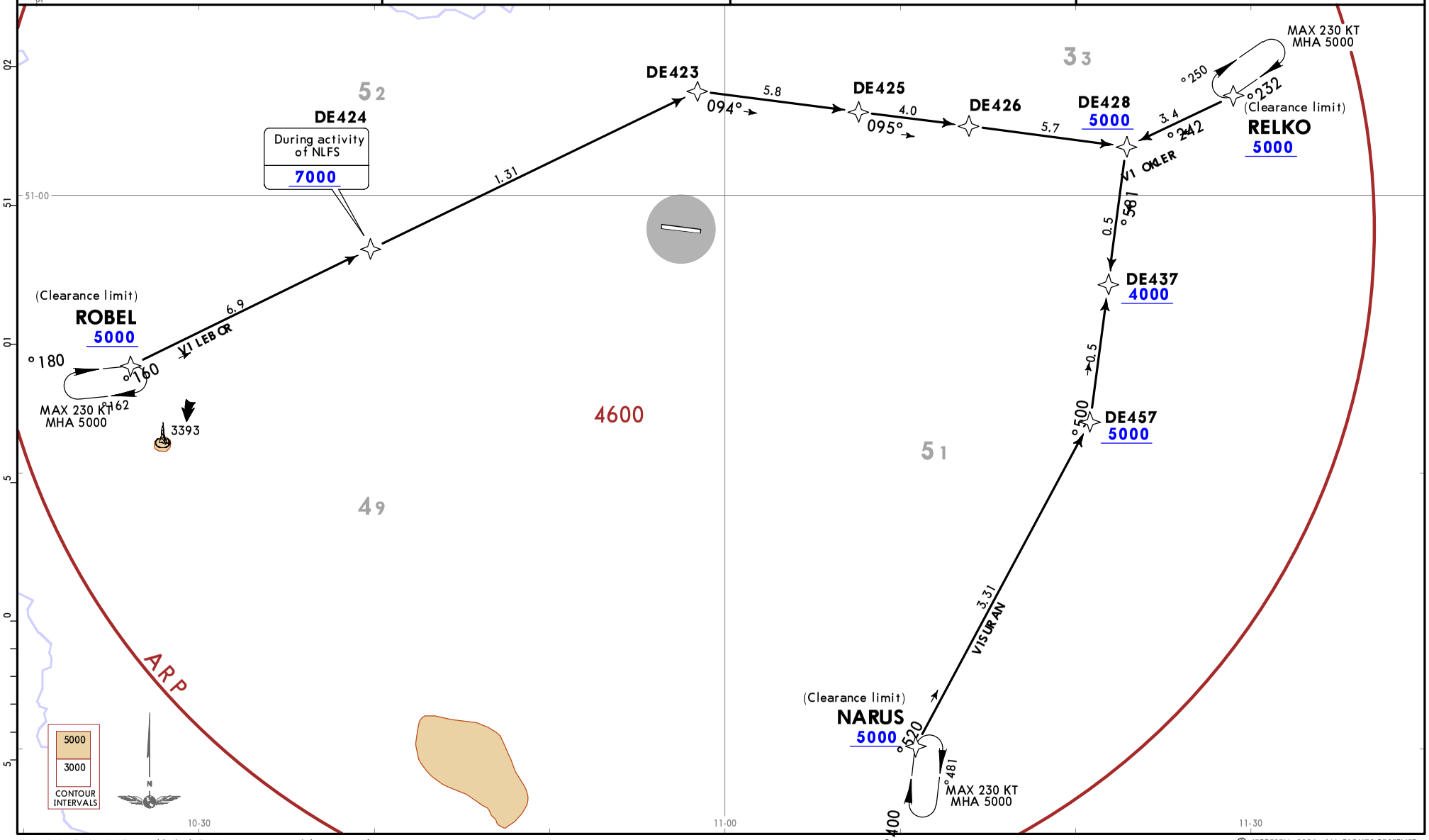

CHANGES: RNAV STARs established; RNAV transitions withdrawn; new format.

© JEPPESEN, 2021. ALL RIGHTS RESERVED.

Printed from JeppView for Windows 5.3.0.0 on 08 Sep 2025; Terminal chart data cycle 16-2023 (Expired); Notice: After 17 Aug 2023, 0000Z, this chart may no longer be valid

Printed from JeppView for Windows 5.3.0.0 on 08 Sep 2025; Terminal chart data cycle 16-2023 (Expired); Notice: After 17 Aug 2023, 0000Z, this chart may no longer be valid

MUNICH Radar (APP) 126.175	Apt Elev 1034	Trans alt: 5000 1. RNAV 1 or RNP-1 or A-RNP equivalent. 2. GPS required. 3. DME/DME, DME/DME/IRU not authorized. 4. Contact MUNICH Radar IMMEDIATELY after take-off. 5. SIDs are also noise abatement procedures. Strict adherence within the limits of aircraft performance is MANDATORY.

Initial climb clearance **FL70**

SID	RWY	ROUTING
ERSIL 1C	**09**	(1500+) - DE1Ø5 - DEØ93 (K250-) - TURAP - DE109 (7000+ ❶) - ERSIL.
ERSIL 1D	**27**	DE286 (K230-) - DE273 (7000+ ❶) - BETKO - ERSIL.

❶ During activity of NLFS.

ERSIL 1C [ERSI1C]
ERSIL 1D [ERSI1D]
RNAV DEPARTURES
(ALL RWYS)

SPEED: MAX 250 KT BELOW FL100 OR AS BY ATC
NOT APPLICABLE WITHIN AIRSPACE C

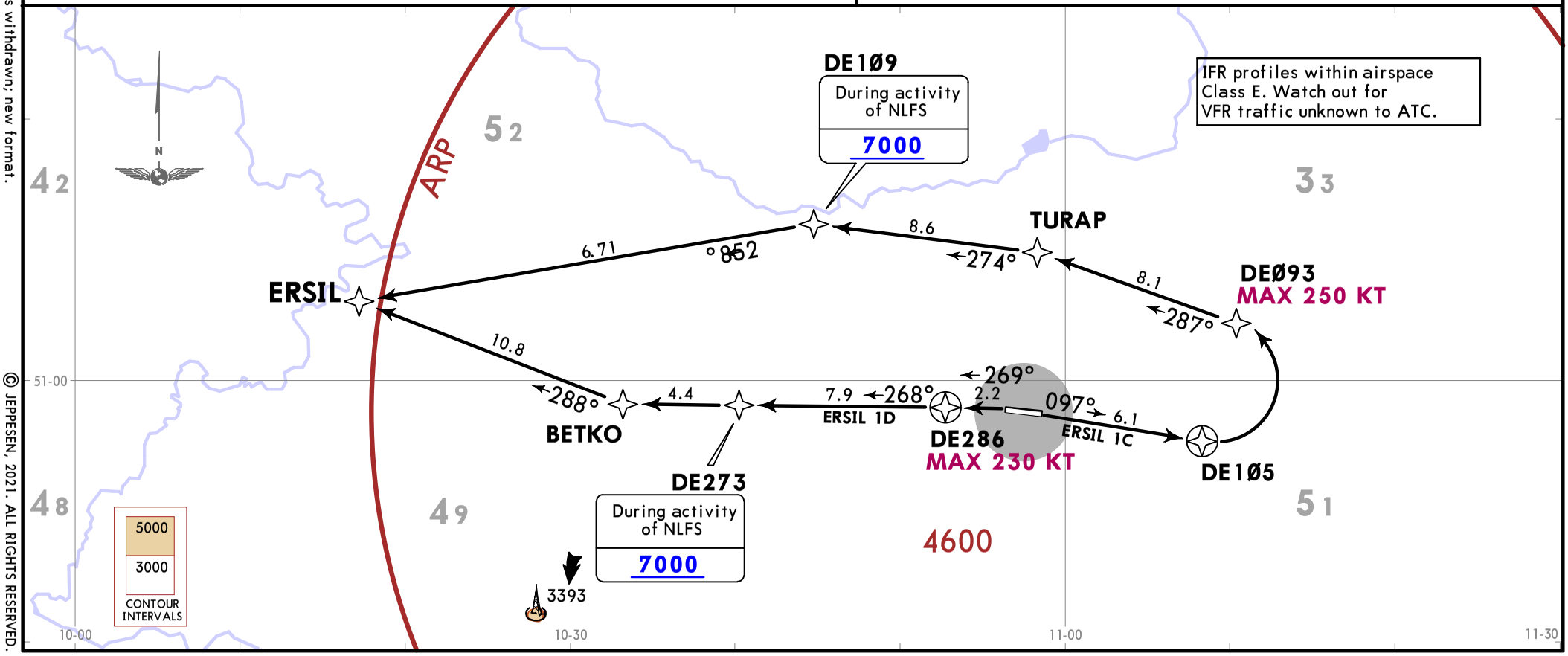

CHANGES: RNAV SIDs established; SIDs withdrawn; new format.

© JEPPESEN, 2021. ALL RIGHTS RESERVED.

Printed from JeppView for Windows 5.3.0.0 on 08 Sep 2025; Terminal chart data cycle 16-2023 (Expired); Notice: After 17 Aug 2023, 0000Z, this chart may no longer be valid

MUNICH Radar (APP) 126.175	Apt Elev 1034	Trans alt: 5000 1. RNAV 1 or RNP-1 or A-RNP equivalent. 2. GPS required. 3. DME/DME, DME/DME/IRU not authorized. 4. Contact MUNICH Radar IMMEDIATELY after take-off. 5. SIDs are also noise abatement procedures. Strict adherence within the limits of aircraft performance is MANDATORY.

LASTO 1C [LAST1C]
LASTO 1D [LAST1D]
RNAV DEPARTURES
(ALL RWYS)

SPEED: MAX 250 KT BELOW FL100 OR AS BY ATC NOT APPLICABLE WITHIN AIRSPACE C

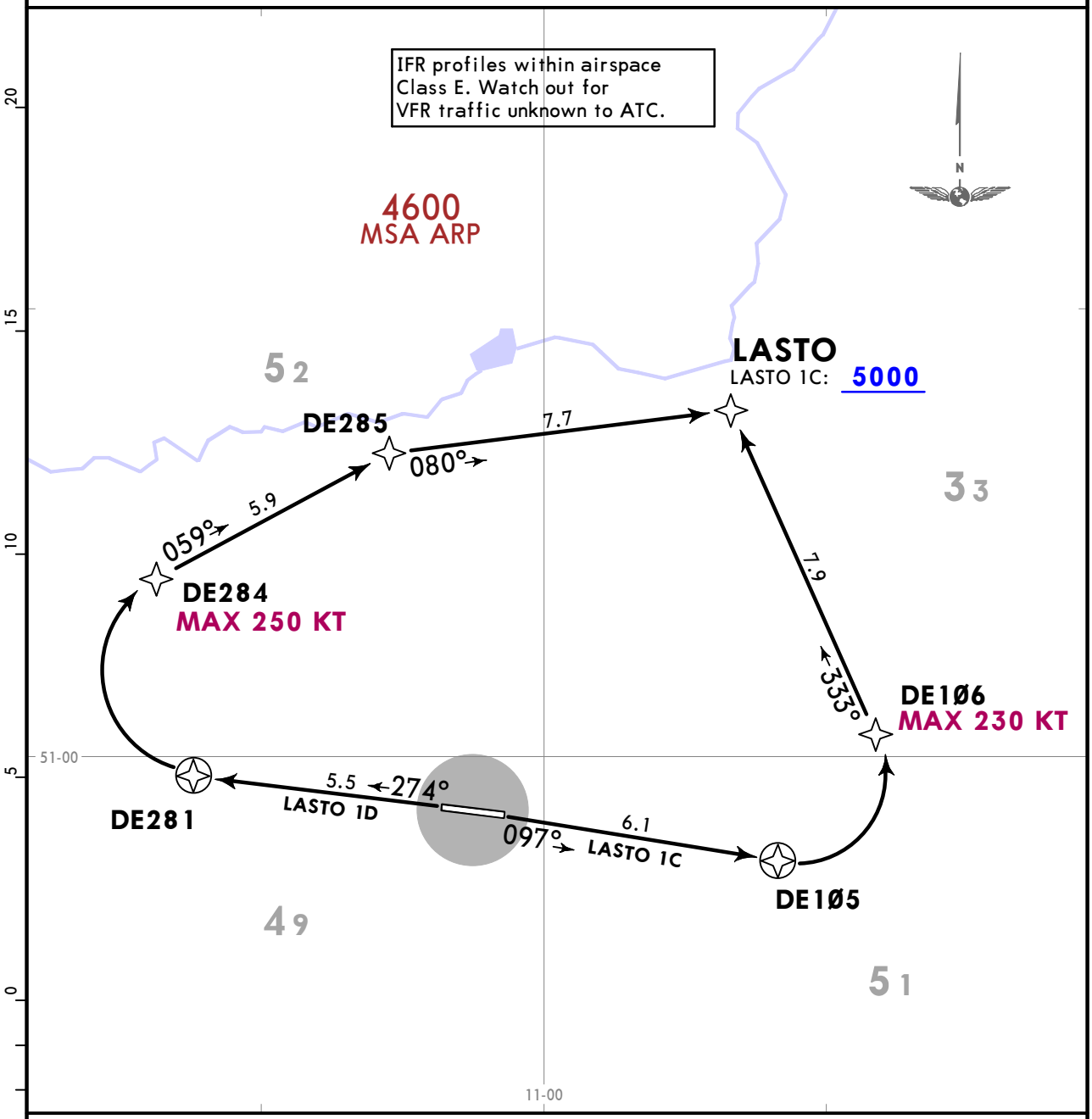

LASTO 1C

This SID requires a minimum climb gradient of 237 per NM (3.9%).

Gnd speed-KT	75	100	150	200	250	300
237 per NM	296	395	593	790	988	1185

Initial climb clearance **FL70**

SID	RWY	ROUTING
LASTO 1C	**09**	(1500+) - DE1Ø6 (K230-) - LASTO (5000+).
LASTO 1D	**27**	(1500+) - DE281 - DE284 (K250-) - DE285 - LASTO.

CHANGES: RNAV SIDs established; SIDs withdrawn; new format.

© JEPPESEN, 2021. ALL RIGHTS RESERVED.

Printed from JeppView for Windows 5.3.0.0 on 08 Sep 2025; Terminal chart data cycle 16-2023 (Expired); Notice: After 17 Aug 2023, 0000Z, this chart may no longer be valid

MUNICH Radar (APP) 126.175	Apt Elev 1034	Trans alt: 5000 1. RNAV 1 or RNP-1 or A-RNP equivalent. 2. GPS required. 3. DME/DME, DME/DME/IRU not authorized. 4. Contact MUNICH Radar IMMEDIATELY after take-off. 5. SIDs are also noise abatement procedures. Strict adherence within the limits of aircraft performance is MANDATORY.

NEVKO 1C [NEVK1C]
NEVKO 1D [NEVK1D]
RNAV DEPARTURES
(ALL RWYS)

SPEED: MAX 250 KT BELOW FL100 OR AS BY ATC NOT APPLICABLE WITHIN AIRSPACE C

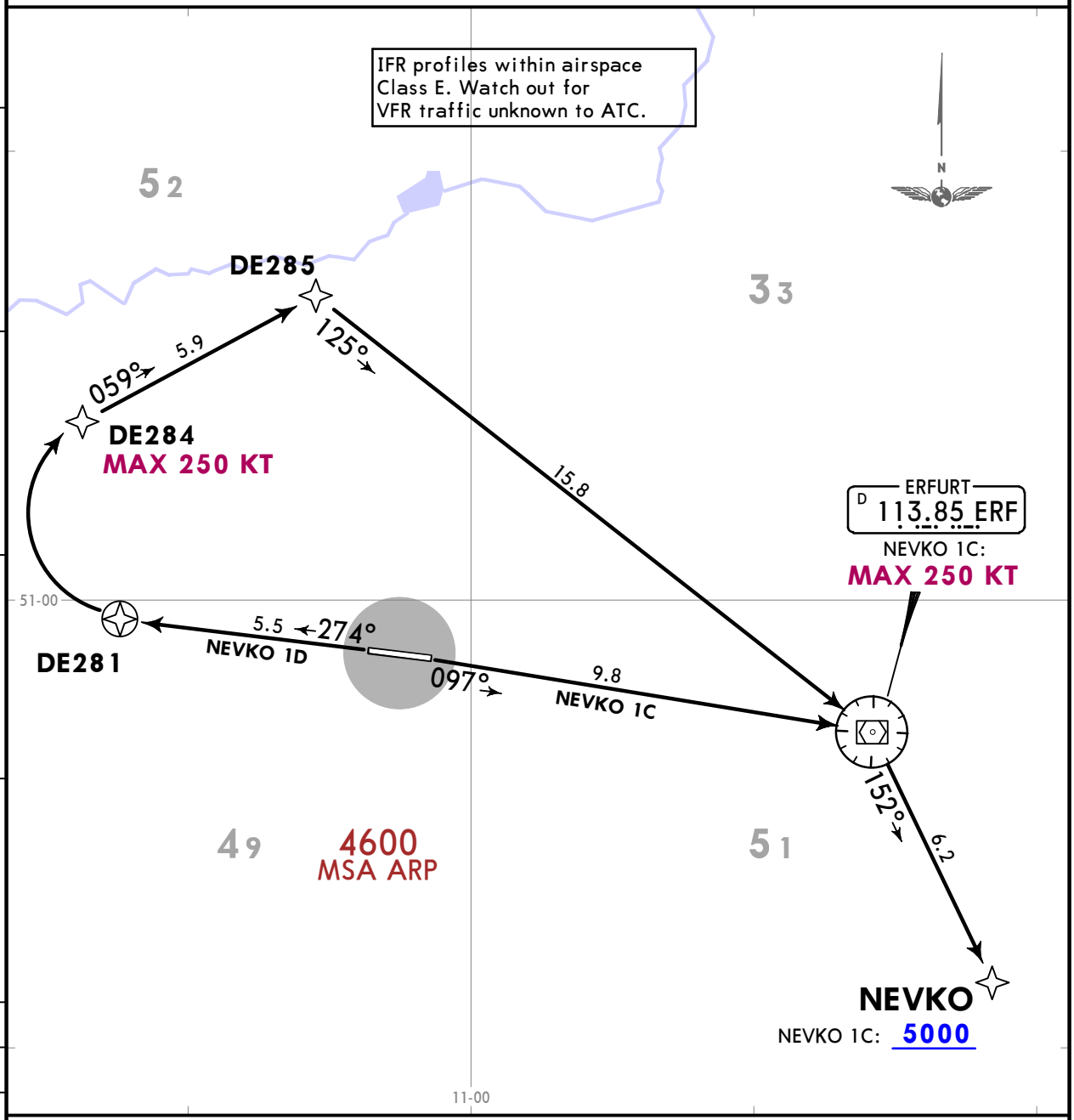

NEVKO 1C

This SID requires a minimum climb gradient of 329 per NM (5.4%).

Gnd speed-KT	75	100	150	200	250	300
329 per NM	411	548	823	1097	1371	1645

Initial climb clearance **FL70**

SID	RWY	ROUTING
NEVKO 1C	**09**	(1500+) - ERF (K250-) - NEVKO (5000+).
NEVKO 1D	**27**	(1500+) - DE281 - DE284 (K250-) - DE285 - ERF - NEVKO.

CHANGES: RNAV SIDs established; SIDs withdrawn; new format.

© JEPPESEN, 2021. ALL RIGHTS RESERVED.

Printed from JeppView for Windows 5.3.0.0 on 08 Sep 2025; Terminal chart data cycle 16-2023 (Expired); Notice: After 17 Aug 2023, 0000Z, this chart may no longer be valid

MUNICH Radar (APP) 126.175	Apt Elev 1034	Trans alt: 5000 1. RNAV 1 or RNP-1 or A-RNP equivalent. 2. GPS required. 3. DME/DME, DME/DME/IRU not authorized. 4. Contact MUNICH Radar IMMEDIATELY after take-off. 5. SIDs are also noise abatement procedures. Strict adherence within the limits of aircraft performance is MANDATORY.

PILAM 1D [PILA1D]
RNAV DEPARTURE
(RWY 27)

NOT TO BE FILED IN FPL, ON REQUEST BY ATC ONLY

SPEED: MAX 250 KT BELOW FL100 OR AS BY ATC NOT APPLICABLE WITHIN AIRSPACE C

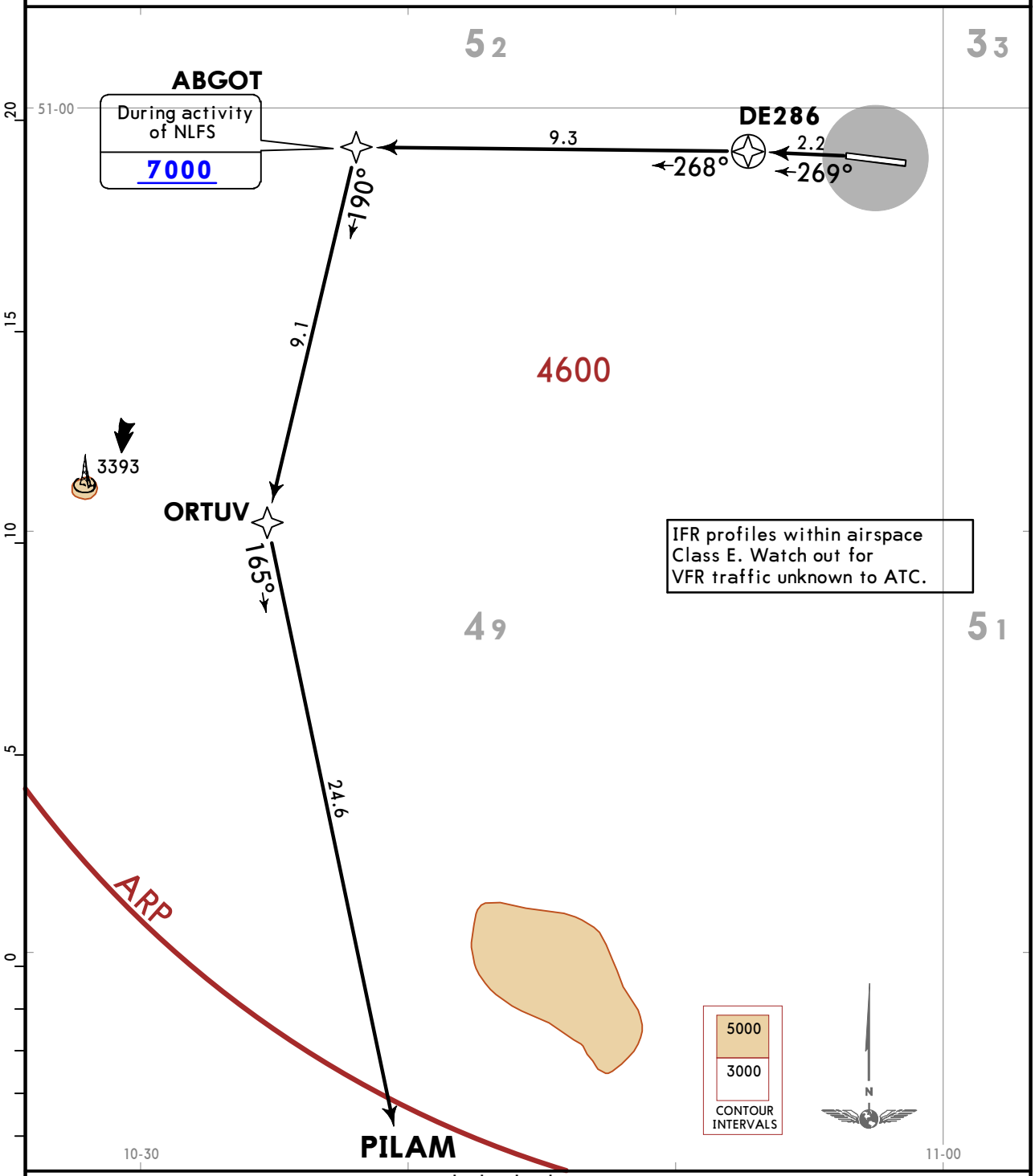

Initial climb clearance **FL70**

ROUTING

DE286 - ABGOT (7000+ ❶) - ORTUV - PILAM.

❶ During activity of NLFS.

CHANGES: RNAV SIDs established; SIDs withdrawn; new format.

© JEPPESEN, 2021. ALL RIGHTS RESERVED.

Printed from JeppView for Windows 5.3.0.0 on 08 Sep 2025; Terminal chart data cycle 16-2023 (Expired); Notice: After 17 Aug 2023, 0000Z, this chart may no longer be valid

ERFURT 1A (ERF 1A)
ERFURT 1B (ERF 1B)
DEPARTURES
(ALL RWYS)

SPEED: MAX 250 KT BELOW FL100 OR AS BY ATC
NOT APPLICABLE WITHIN AIRSPACE C

MUNICH Radar (APP) 126.175	Apt Elev 1034	Trans alt: 5000 1. For non RNAV 1 equipped ACFT only. 2. For RNAV 1 equipped ACFT not to be filed in FPL, by ATC only. 3. Contact MUNICH Radar IMMEDIATELY after take-off. 4. SIDs are also noise abatement procedures. Strict adherence within the limits of aircraft performance is MANDATORY.

Initial climb clearance **FL70**

SID	RWY	ROUTING
ERF 1A	**09**	On ERF R276 inbound to ERF, turn LEFT, ERF R090 to DE437, turn LEFT direct to ERF.
ERF 1B	**27**	On 274° heading to D6.3 EFD/D17.0 ERF, turn RIGHT, 059° heading, intercept ERF R305 inbound to ERF.

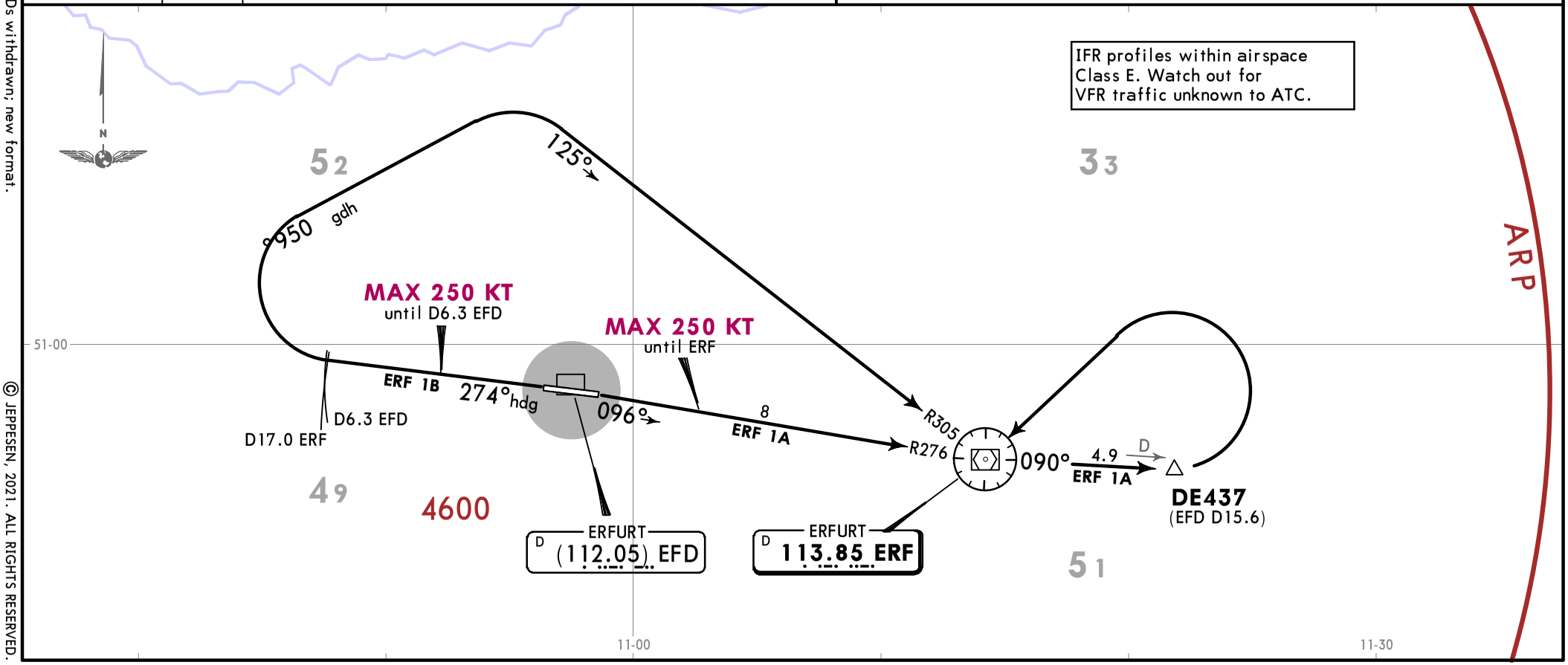

© JEPPESEN, 2021. ALL RIGHTS RESERVED.

Printed from JeppView for Windows 5.3.0.0 on 08 Sep 2025; Terminal chart data cycle 16-2023 (Expired); Notice: After 17 Aug 2023, 0000Z, this chart may no longer be valid

NOISE ABATEMENT

SUMMER	**: LT minus 2 HOURS**	**=**	**UTC (Z)**
WINTER	**: LT minus 1 HOUR**	**=**	**UTC (Z)**

GENERAL

ACFT with a wingspan of 52m or more and ACFT with a distance of the outer wheels of the undercarriage of 14m and more (ACFT Categories E and F) may only take off and land with prior permission (PPR). Requests shall be directed to:
Duty Traffic Manager
E-mail: traffic@EDDE.aero
Tel.: +49 361 656 2251,
Fax: +49 361 656 2238.

Jet ACFT that do not fulfil the noise protection requirements according to ICAO Annex 16, Chapter 3, as well as ACFT of ACFT group S7 may only take-off and land with permission from the 'Thueringer Landesverwaltungsamt Referat 520 (Strassen- und Luftverkehr)', e-mail: luftverkehr@tlvwa.thueringen.de.

NIGHT FLYING RESTRICTIONS

1. Between 2200-0600LT RWY 27 shall only be used for take-offs and RWY 09 only for landings, unless use of these take-off and landing directions is impossible for meteorological or flight safety reasons.

   ACFT with a MTOW of more than 150,000kg are not permitted to take-off from RWY 09 between 2200-0600LT.
2. **Propeller-driven ACFT with a MTOW up to 2000kg and powered gliders**

   Between 2200-0600LT (workdays) or 2000-0800LT (Sundays and holidays) take-off or landing are permitted only if they fall below the noise limit in accordance with ICAO Annex 16, Chapter 6 or 10 by at least 8 dB (A).
3. **Propeller-driven ACFT with a MTOW of more than 2000kg**

   Between 2200-0600LT (workdays) or 2000-0800LT (Sundays and holidays) take-off or landing are permitted only if they fall below the noise limit of 80 dB (A) in accordance with ICAO Annex 16, Chapter 6 by at least 4 dB(A) or are to be classified as being particularly low in noise according to other terms of admission.
4. **Jet ACFT**

   Between 2200-0600LT take-off or landing are permitted if they do not exceed the noise limits in accordance with ICAO Annex 16, Volume I, Chapter 3 and are included in the Attachment (10-4A).
5. **Jet ACFT with a MTOW of more than 150,000kg**

   Between 2300-0600LT take-offs are generally not permitted.

EXCEPTIONS

Delayed scheduled ACFT in scheduled air services, cargo or charter traffic whose scheduled arrival or take-off at Erfurt is before 2200LT, are excluded from the regulations described in paragraph No. 1, 3 and 4.

Landings of other delayed scheduled ACFT are excluded from night-flying restrictions until 2300LT.

Between 2300-0600LT delayed scheduled jet ACFT with a MTWO of more than 150,000kg are permitted to take-off on RWY 27 only if they are included in the Attachment (10-4A).

© JEPPESEN, 2003, 2021. ALL RIGHTS RESERVED.

Printed from JeppView for Windows 5.3.0.0 on 08 Sep 2025; Terminal chart data cycle 16-2023 (Expired); Notice: After 17 Aug 2023, 0000Z, this chart may no longer be valid

NOISE ABATEMENT

ATTACHMENT

All ACFT up to MTOW of 25,000kg not exceeding the noise values found in ICAO Annex 16, Volume I, Chapter 3, as well as the following airplane types:

A300, A310, A319, A320, A321, A330, A340
BAe 146/AVRO RJ-series
B727-100 re-engined with 3 Tay-power units,
B737-300/400/500/600/700/800, B747-400, B757, B767, B777
FOKKER 70/100, Gulfstream IV, MD DC8-70series, MD11, MD90
Limited to landings: MD DC10-30, MD80 all versions
Limited to take-offs: Lockhead L1011, MD DC 10

If necessary, applications for exceptions shall be directed to:

Flughafen Erfurt GmbH
Duty Traffic Manager
Binderslebener Landstrasse 100
99092 Erfurt
Tel.: +49 361 656 2251
Fax: +49 361 656 2238
E-mail: traffic@EDDE.aero

REVERSE THRUST

Reverse thrust other than idle thrust shall only be used as far as necessary for safety reasons.

RUN-UP TESTS

Engine test runs are not permitted between 2200-0600LT.

Between 2200-0600LT engine test runs are only allowed with the approval of the Aviation Supervision Authority (Luftaufsicht).

Requests shall be directed to:
Duty Traffic Manager
E-mail: traffic@EDDE.aero,
Tel.: +49 361 656 2251
Fax: +49 361 656 2238.

Noise disturbance for residents shall be kept to a minimum.

The number of engine test runs shall be reduced to a minimum.

© JEPPESEN, 2003, 2021. ALL RIGHTS RESERVED.

Printed from JeppView for Windows 5.3.0.0 on 08 Sep 2025; Terminal chart data cycle 16-2023 (Expired); Notice: After 17 Aug 2023, 0000Z, this chart may no longer be valid

EDDE/ERF

Apt Elev **1034′**
N50 58.8 E010 57.5

JEPPESEN **ERFURT-WEIMAR, GERMANY**

27 AUG 21 (10-9) **Eff 9 Sep**

ERFURT-WEIMAR

ATIS	ERFURT Apron	Ground	Tower
133.455	121.905	121.755	121.155

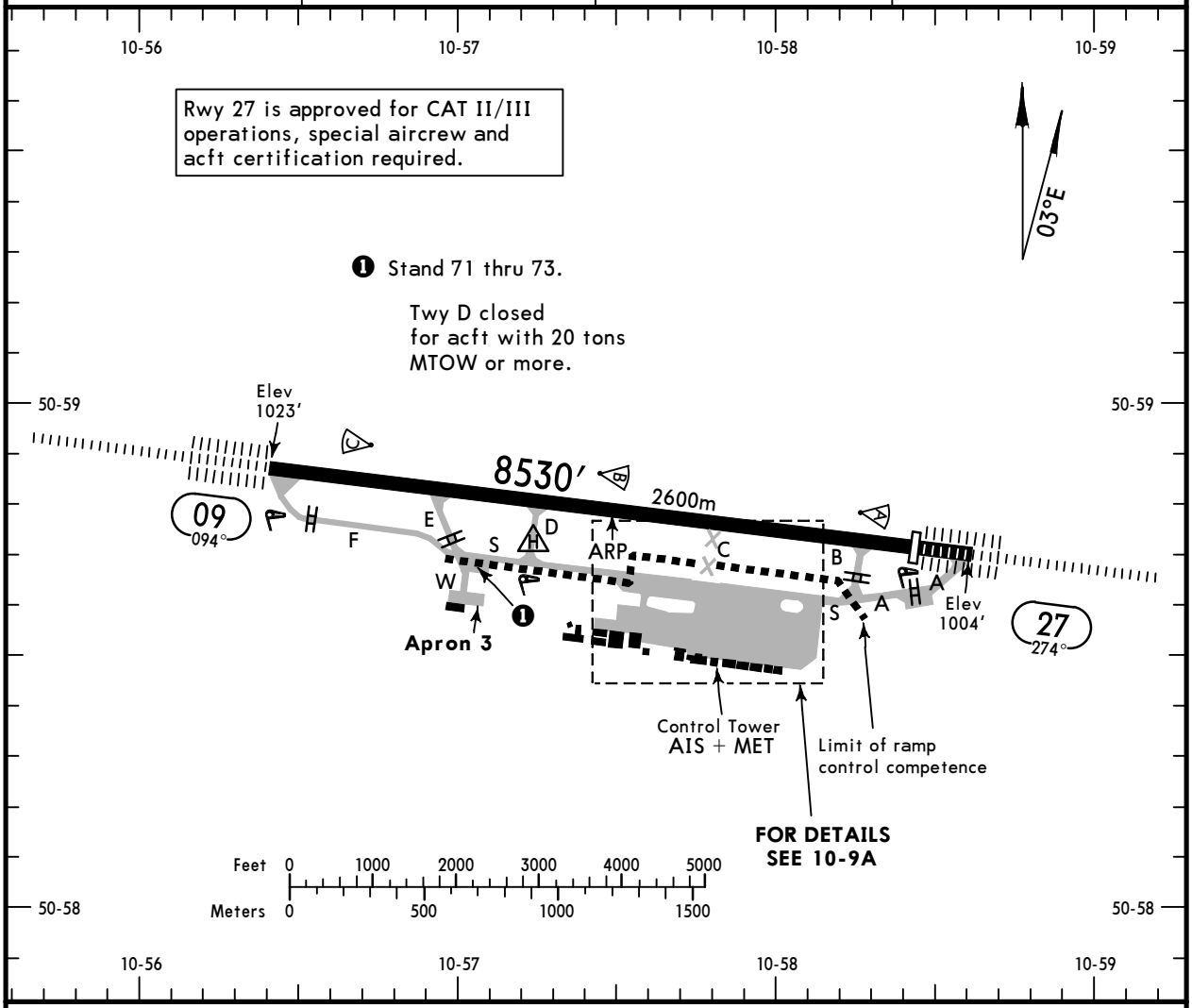

ADDITIONAL RUNWAY INFORMATION

RWY		USABLE LENGTHS — LANDING BEYOND — Threshold	Glide Slope	TAKE-OFF	WIDTH
09 ❷ 27	HIRL CL (15m) ALSF-II REIL TDZ PAPI-L (3.0°) RVR	7841′ 2390m	7647′ 2331m 6976′ 2126m	❸	164′ 50m

❷ Antiskid layer.

❸ TAKE-OFF RUN AVAILABLE

RWY 09: From rwy head 8530′ (2600m)
twy E int 6562′ (2000m)
twy D int 5249′ (1600m)

RWY 27: From rwy head 8530′ (2600m)
twy B int 7218′ (2200m)
twy D int 3281′ (1000m)

Standard TAKE-OFF

	Low Visibility Take-off					
	❶ HIRL, CL & relevant RVR	RL, CL & relevant RVR	RL & CL	Day: RL & RCLM Night: RL or CL	Day: RL or RCLM Night: RL or CL	Adequate vis ref (Day only)
A B C D	TDZ, MID, RO RVR 125m	TDZ, MID, RO RVR 150m	RVR 200m	RVR 300m	400m	500m

❶ RWY 27: RVR 75m with approved guidance system or HUD/HUDLS.

CHANGES: Rwy designation and bearings. Variation. Apt and rwy elev.

© JEPPESEN, 1998, 2021. ALL RIGHTS RESERVED.

Printed from JeppView for Windows 5.3.0.0 on 08 Sep 2025; Terminal chart data cycle 16-2023 (Expired); Notice: After 17 Aug 2023, 0000Z, this chart may no longer be valid

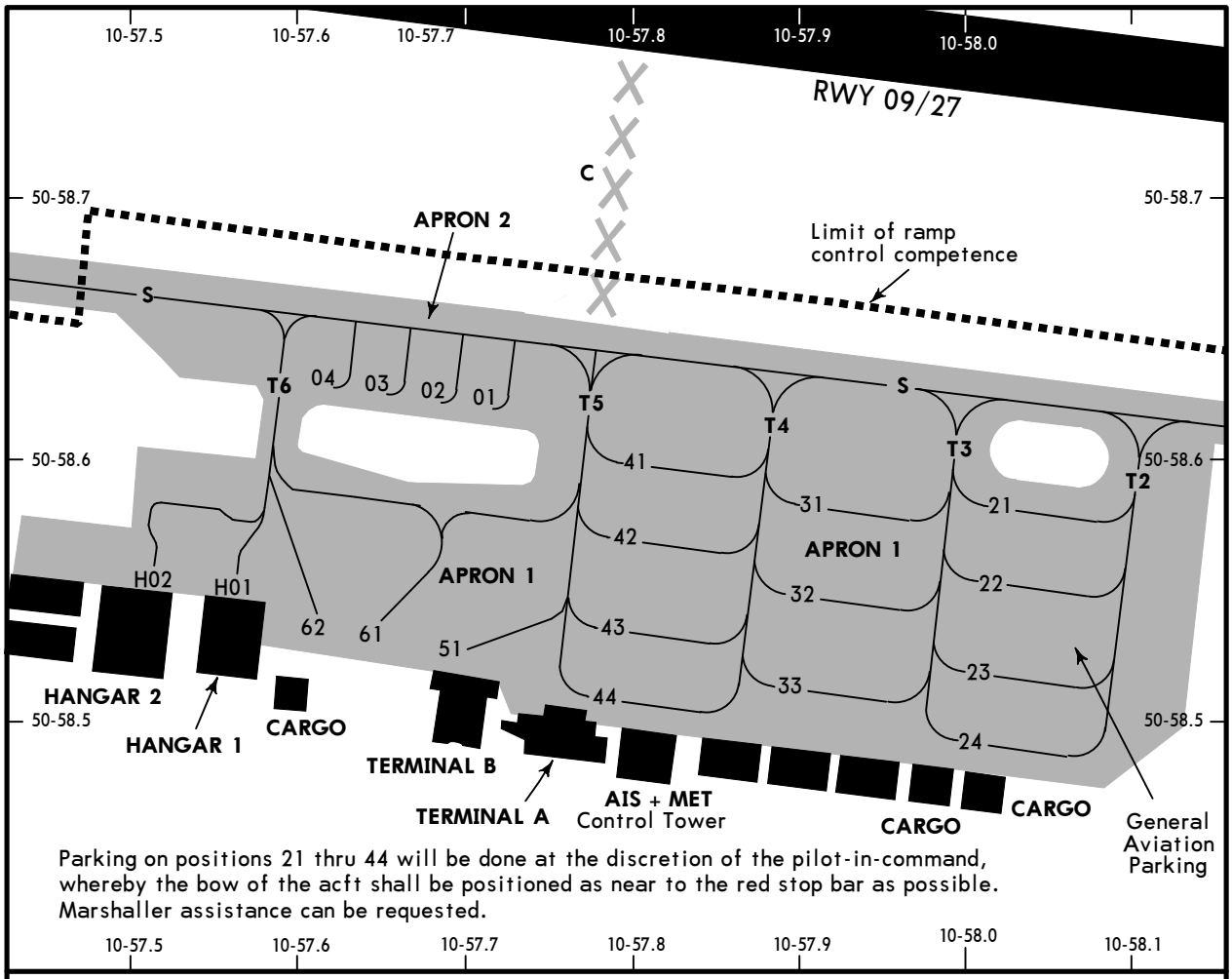

Parking on positions 21 thru 44 will be done at the discretion of the pilot-in-command, whereby the bow of the acft shall be positioned as near to the red stop bar as possible. Marshaller assistance can be requested.

INS COORDINATES

STAND No.	COORDINATES	STAND No.	COORDINATES
01, 02	N50 58.6 E010 57.7	62	N50 58.6 E010 57.6
03, 04	N50 58.6 E010 57.6	71	N50 58.7 E010 57.1
21, 22	N50 58.6 E010 58.0	72, 73	N50 58.7 E010 57.0
23, 24	N50 58.5 E010 58.0		
31, 32	N50 58.6 E010 57.9		
33	N50 58.5 E010 57.9		
41 thru 43	N50 58.6 E010 57.8		
44	N50 58.5 E010 57.8		
51	N50 58.6 E010 57.7		
61	N50 58.5 E010 57.6		

CAT II/III OPERATIONS

As soon as notice of CAT II/III all-weather operations has been given, all acft are permitted to taxi on taxiways with switched on centerline lighting only, or in accordance with separate instructions by ATC.

Landing acft shall leave the rwy via twy E. At the request of the pilot-in-command, guidance by a "Follow me" car will be provided.

Stop bars have been installed at the CAT II/III holding positions which may not be taxied over when they are switched on. No kind of clearence whatever, includes permission to cross a stop bar which is switched on.

© JEPPESEN, 1998, 2021. ALL RIGHTS RESERVED.

Printed from JeppView for Windows 5.3.0.0 on 08 Sep 2025; Terminal chart data cycle 16-2023 (Expired); Notice: After 17 Aug 2023, 0000Z, this chart may no longer be valid

EDDE/ERF
ERFURT-WEIMAR

JEPPESEN 23 SEP 22 (11-1) Eff 6 Oct

ERFURT-WEIMAR, GERMANY
ILS or LOC Rwy 09

BRIEFING STRIP

ATIS	MUNICH Radar (APP) South	ERFURT Tower	Ground
133.455	126.175	121.155	121.755

LOC IERE	Final Apch Crs	BULEM	ILS DA(H)	Apt Elev 1034′
109.1	094°	4000′ (2977′)	1223′ (200′)	Rwy 1023′

MISSED APCH: Climb on R-276 inbound to VOR, then turn LEFT on R-090 to DE437. Then turn LEFT direct to VOR (MAX 230 KT until established inbound VOR). Cross VOR at 5000′.

Alt Set: hPa (IN on req) Rwy Elev: 37 hPa Trans level: By ATC Trans alt: 5000′

DME required.

MSA ARP: 4600

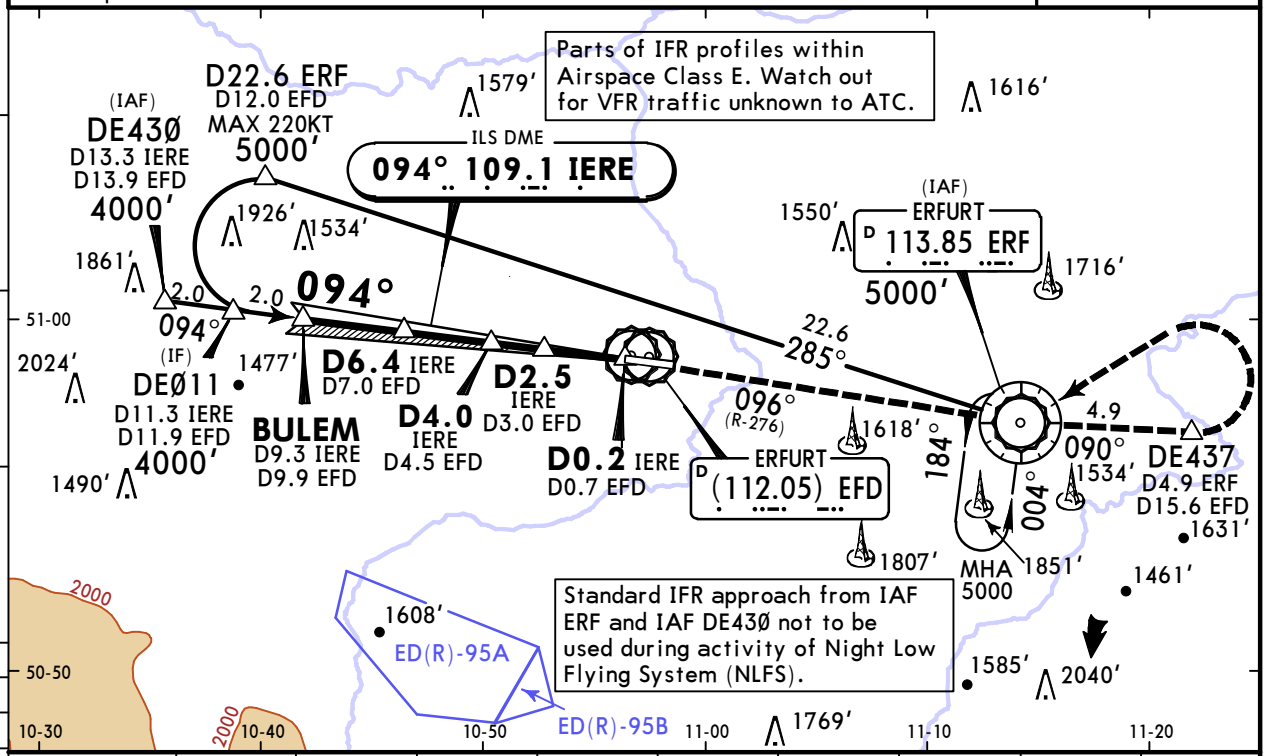

LOC (GS out)	EFD DME	9.0	8.0	7.0	6.0	5.0	4.0	3.0	2.0
	ALTITUDE	3728′	3409′	3090′	2772′	2453′	2134′	1815′	1496′

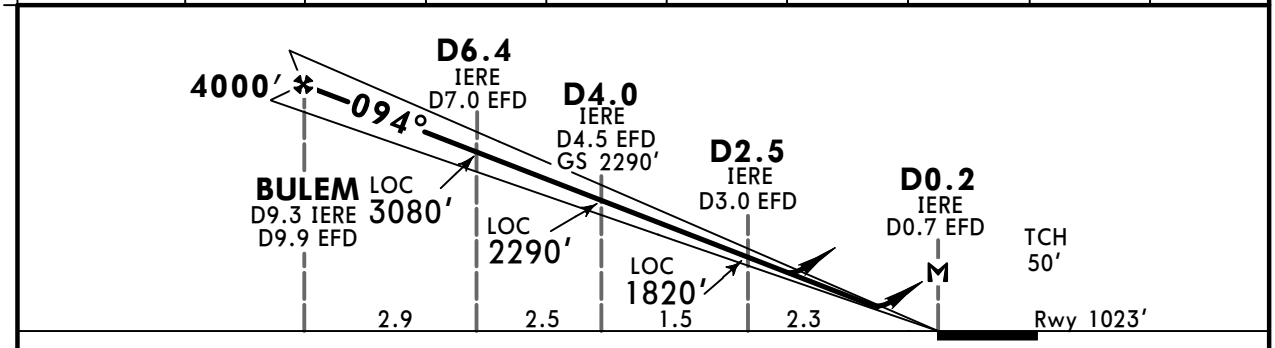

Gnd speed-Kts	70	90	100	120	140	160
ILS GS or LOC Descent Angle 3.00°	372	478	531	637	743	849
MAP at D0.2 IERE/D0.7 EFD						

ALSF-II REIL PAPI

ERF 113.85 R-276

Standard STRAIGHT-IN LANDING RWY 09

	ILS DA(H) 1223′ (200′) FULL	TDZ or CL out	ALS out	LOC (GS out) CDFA DA/MDA(H) 1400′ (377′)	ALS out
A	RVR 550m	RVR 550m [1]	RVR 1200m	RVR 1000m	RVR 1500m
B					
C					RVR 1700m
D					

CIRCLE-TO-LAND: Not authorized South of airport

Max Kts	MDA(H)	VIS
100	1590′ (556′)	1500m
135	1660′ (626′)	1600m
180	1760′ (726′)	2400m
205	1800′ (766′)	3600m

[1] RVR 750m when a Flight Director or Autopilot or HUD to DA is not used.

PANS OPS

CHANGES: IERE DME established.

© JEPPESEN, 1999, 2022. ALL RIGHTS RESERVED.

Printed from JeppView for Windows 5.3.0.0 on 08 Sep 2025; Terminal chart data cycle 16-2023 (Expired); Notice: After 17 Aug 2023, 0000Z, this chart may no longer be valid

EDDE/ERF
ERFURT-WEIMAR

JEPPESEN 23 SEP 22 (11-2) Eff 6 Oct

ERFURT-WEIMAR, GERMANY
ILS or LOC Rwy 27

BRIEFING STRIP™

ATIS	MUNICH Radar (APP) South	ERFURT Tower	Ground
133.455	126.175	121.155	121.755

LOC IERW	Final Apch Crs	ENORO	ILS DA(H)	Apt Elev 1034′
109.9	274°	4000′ (2986′)	1214′ (200′)	Rwy 1014′

MISSED APCH: Climb on R-276 to DE491, then turn RIGHT on heading 059° to intercept R-305 (MAX 230 KT until established on R-305), turn RIGHT on R-305 inbound to VOR. Cross VOR at 5000′.

4600 MSA ARP

Alt Set: hPa (IN on req) | Rwy Elev: 37 hPa | Trans level: By ATC | Trans alt: 5000′

DME required.

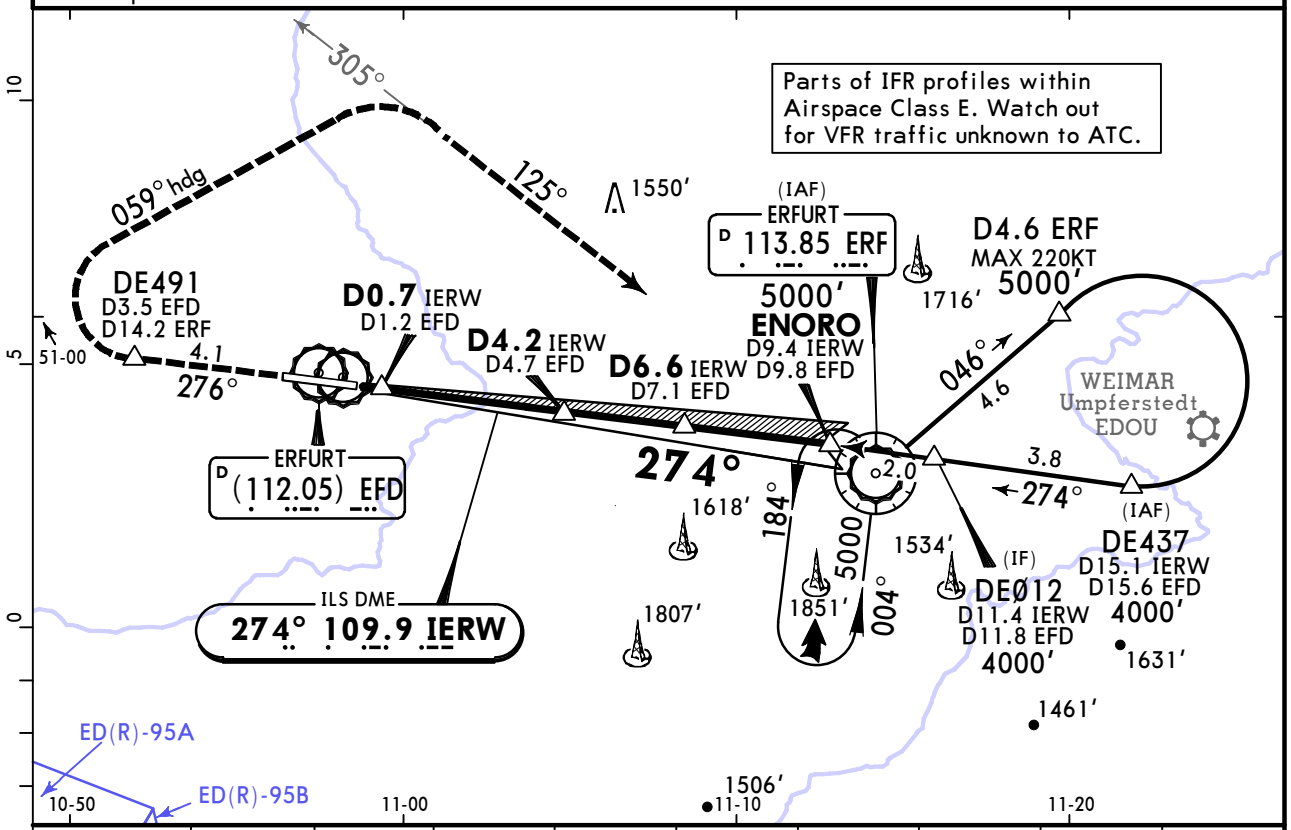

LOC (GS out)	EFD DME	2.0	3.0	4.0	5.0	6.0	7.0	8.0	9.0
	ALTITUDE	1500′	1819′	2138′	2456′	2775′	3093′	3412′	3730′

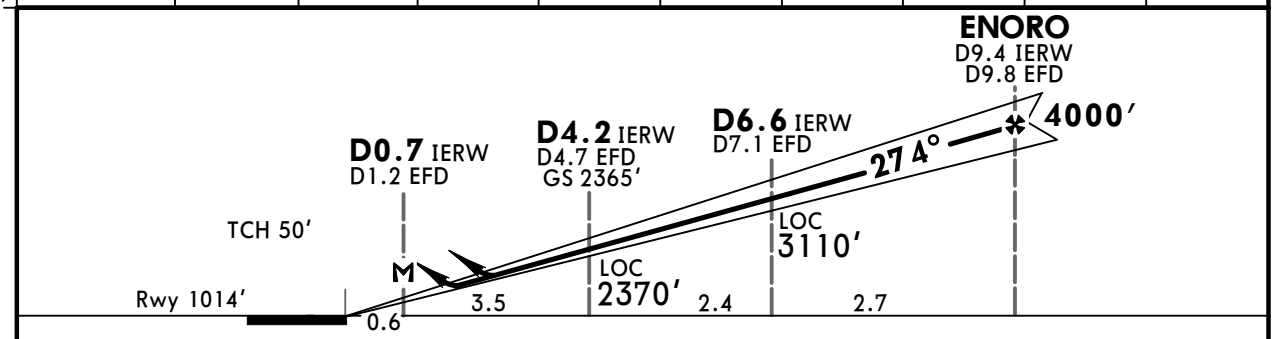

Gnd speed-Kts	70	90	100	120	140	160
ILS GS or LOC Descent Angle 3.00°	372	478	531	637	743	849
MAP at D0.7 IERW/D1.2 EFD						

ALSF-II
REIL
PAPI

DE491 ↑ on ERF 113.85 R-276

Standard STRAIGHT-IN LANDING RWY 27

ILS DA(H) 1214′ (200′)

CDFA DA/MDA(H) LOC (GS out) A: 1340′ (326′) BCD: 1370′ (356′)

	FULL	TDZ or CL out	ALS out		ALS out
A	RVR 550m	RVR 550m [1]	RVR 1200m	RVR 800m	RVR 1500m
B					
C				RVR 900m	RVR 1600m
D					

CIRCLE-TO-LAND
Not authorized South of airport

Max Kts	MDA(H)	VIS
100	1590′ (556′)	1500m
135	1660′ (626′)	1600m
180	1760′ (726′)	2400m
205	1800′ (766′)	3600m

PANS OPS

[1] RVR 750m when a Flight Director or Autopilot or HUD to DA is not used.

CHANGES: IERW DME established.

© JEPPESEN, 1998, 2022. ALL RIGHTS RESERVED.

Printed from JeppView for Windows 5.3.0.0 on 08 Sep 2025; Terminal chart data cycle 16-2023 (Expired); Notice: After 17 Aug 2023, 0000Z, this chart may no longer be valid

EDDE/ERF
ERFURT-WEIMAR

JEPPESEN 23 SEP 22 Eff 6 Oct (11-2A)

ERFURT-WEIMAR, GERMANY
CAT II/III ILS Rwy 27

BRIEFING STRIP ™

ATIS	MUNICH Radar (APP) South	ERFURT Tower	Ground
133.455	126.175	121.155	121.755

LOC IERW	Final Apch Crs	ENORO	CAT IIIB, IIIA & II ILS Refer to Minimums	Apt Elev 1034′ Rwy 1014′
109.9	274°	4000′ (2986′)		

MISSED APCH: Climb on R-276 to DE491, then turn RIGHT on heading 059° to intercept R-305 (MAX 230 KT until established on R-305), turn RIGHT on R-305 inbound to VOR. Cross VOR at 5000′.

4600 MSA ARP

Alt Set: hPa (IN on req) | Rwy Elev: 37 hPa | Trans level: By ATC | Trans alt: 5000′

1. DME required. 2. Special Aircrew & Acft Certification Required.

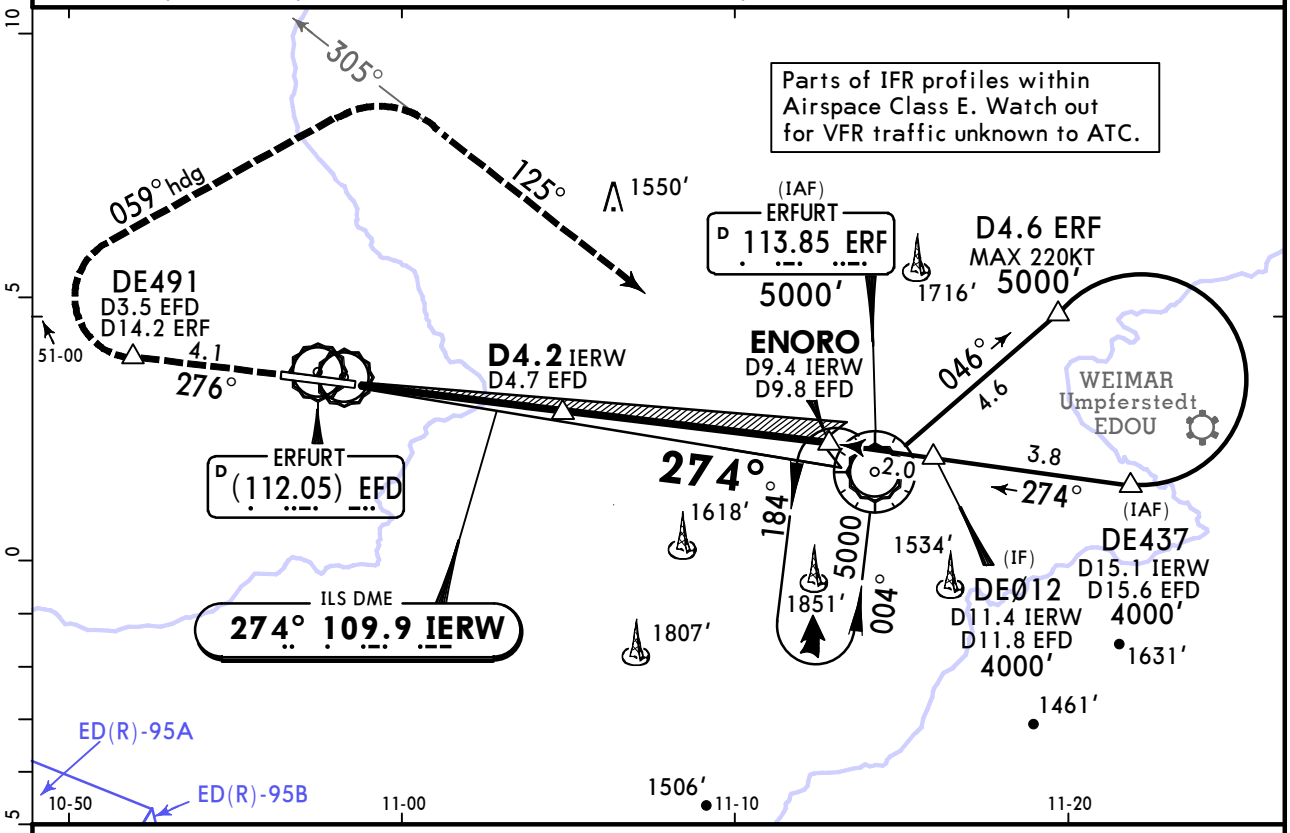

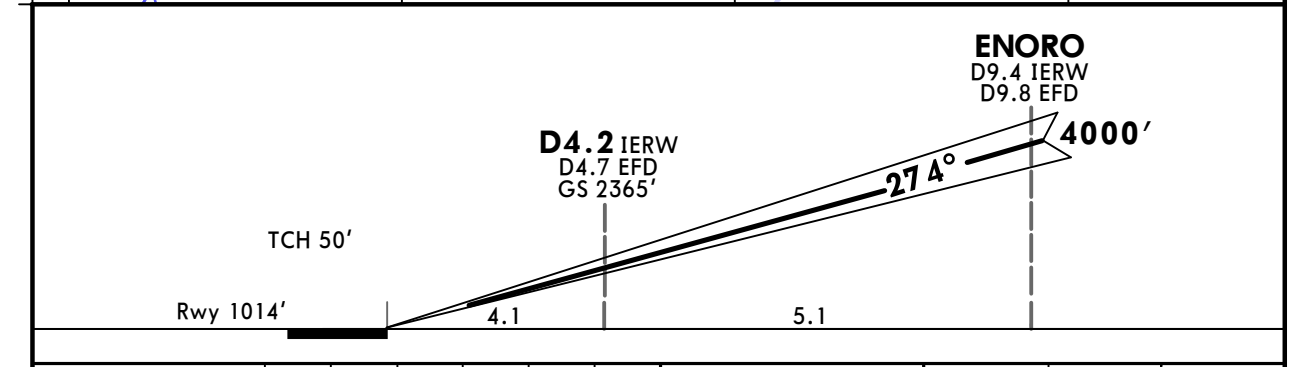

Gnd speed-Kts		70	90	100	120	140	160
GS	3.00°	372	478	531	637	743	849

ALSF-II REIL PAPI

DE491 ↑ ERF 113.85 on R-276

Standard STRAIGHT-IN LANDING RWY 27

CAT IIIB ILS	CAT IIIA ILS	CAT II ILS ABC	CAT II ILS D
	DH 50′	RA 113′ DA(H) 1114′ (100′)	RA 115′ DA(H) 1116′ (102′)
RVR 75m	RVR 200m	RVR 300m	

PANS OPS

CHANGES: IERW DME established.

© JEPPESEN, 1998, 2022. ALL RIGHTS RESERVED.

Printed from JeppView for Windows 5.3.0.0 on 08 Sep 2025; Terminal chart data cycle 16-2023 (Expired); Notice: After 17 Aug 2023, 0000Z, this chart may no longer be valid

EDDE/ERF
ERFURT-WEIMAR

JEPPESEN ERFURT-WEIMAR, GERMANY

17 SEP 21 (12-1)

RNP Rwy 09

BRIEFING STRIP™

ATIS	MUNICH Radar (APP) South	ERFURT Tower	Ground
133.455	126.175	121.155	121.755

EGNOS	Final Apch Crs	BULEM	LPV CAT I DA(H)	Apt Elev 1034'
Ch 83827 E09A	094°	4000' (2977')	1223' (200')	Rwy 1023'

MISSED APCH: Climb on 096° to ERF, then to DE437, then turn LEFT direct to ERF. After passing DE437 (MAX 230 KT until DE437) cross ERF at 5000'.

Alt Set: hPa (IN on req) Rwy Elev: 37 hPa Trans level: By ATC Trans alt: 5000'

4600 MSA ARP

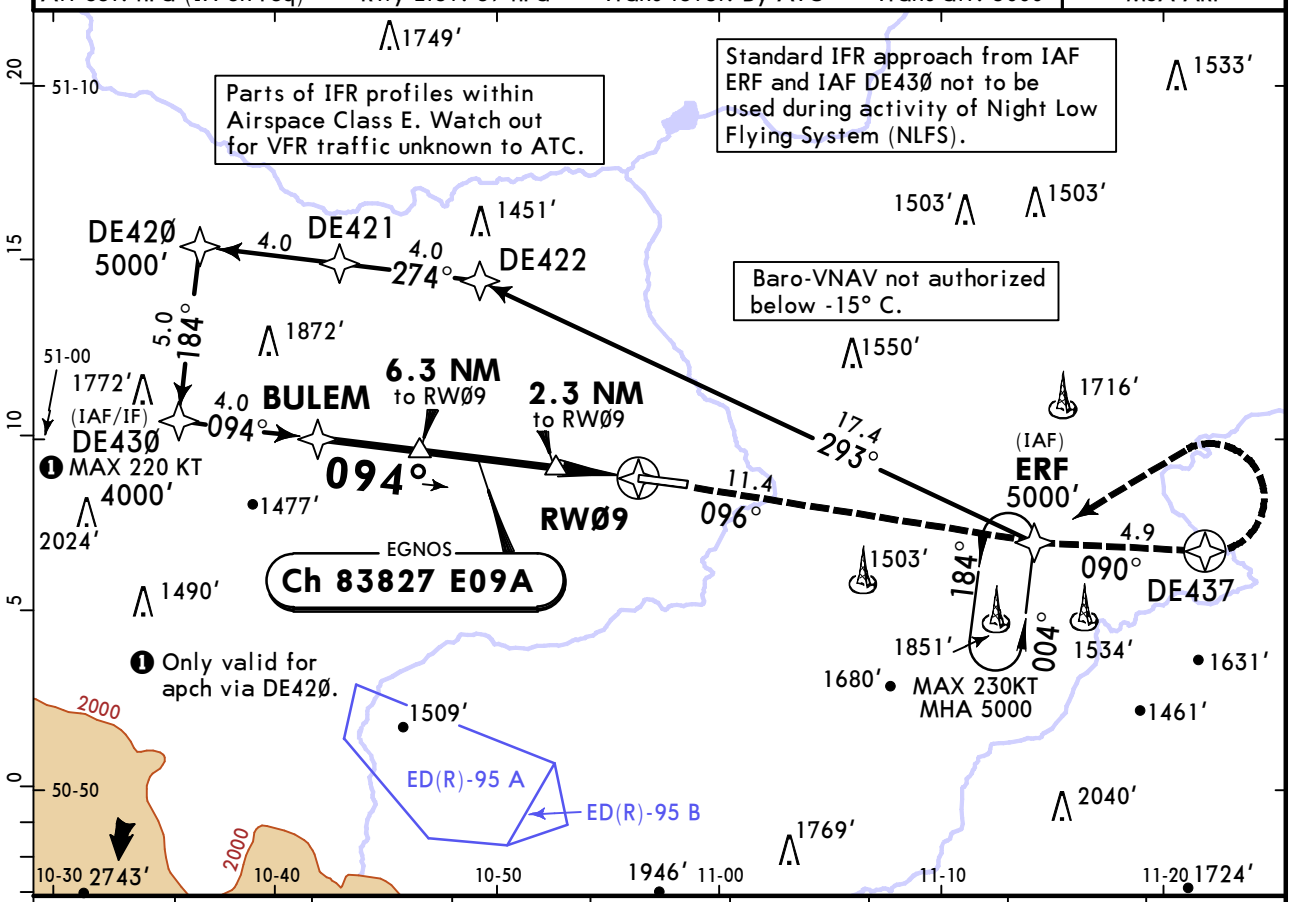

DIST to RW09	9.0	8.0	7.0	6.0	5.0	4.0	3.0	2.0
ALTITUDE	3941'	3622'	3304'	2985'	2666'	2348'	2029'	1711'

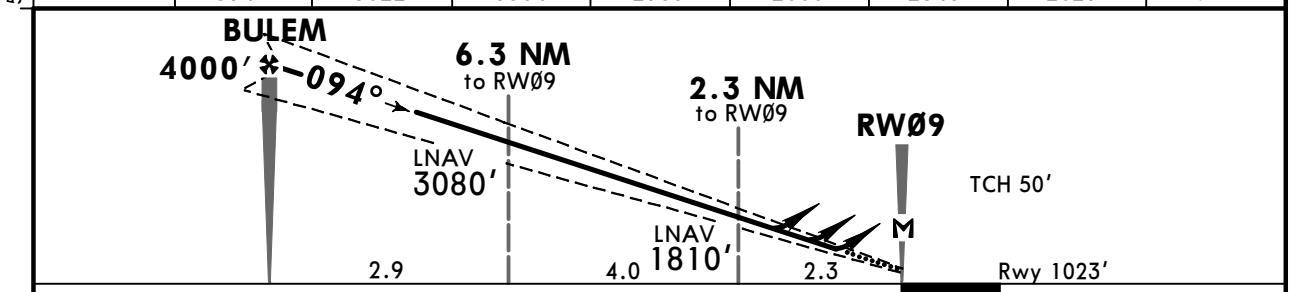

Gnd speed-Kts		70	90	100	120	140	160
Glide Path Angle	3.00°	372	478	531	637	743	849
MAP at RW09							

ALSF-II, REIL, PAPI

230 KT MAX

ERF on 096°

Standard STRAIGHT-IN LANDING RWY 09

	LPV CAT I DA(H) 1223' (200')			LNAV/VNAV DA(H) 1273' (250')		LNAV CDFA DA/MDA(H) 1450' (427')	
		TDZ or CL out	ALS out		ALS out		ALS out
A	RVR 550m	[1] RVR 550m	RVR 1200m	RVR 750m [2]	RVR 1300m	RVR 1300m	RVR 1500m
B							
C							RVR 2000m
D							

CIRCLE-TO-LAND
Not authorized
South of airport

Max Kts	MDA(H)	VIS
100	1590' (556')	1500m
135	1660' (626')	1600m
180	1760' (726')	2400m
205	1800' (766')	3600m

PANS OPS

[1] RVR 750m when a Flight Director or Autopilot or HUD to DA is not used.
[2] With TDZ & CL & HUD: RVR 550m.

CHANGES: Missed apch. Speed restriction.

© JEPPESEN, 2007, 2021. ALL RIGHTS RESERVED.

Printed from JeppView for Windows 5.3.0.0 on 08 Sep 2025; Terminal chart data cycle 16-2023 (Expired); Notice: After 17 Aug 2023, 0000Z, this chart may no longer be valid

EDDE/ERF
ERFURT-WEIMAR

JEPPESEN 17 SEP 21 (12-2)

ERFURT-WEIMAR, GERMANY
RNP Rwy 27

BRIEFING STRIP ™

ATIS	MUNICH Radar (APP) South	ERFURT Tower	Ground
133.455	126.175	121.155	121.755

EGNOS	Final Apch Crs	ENORO	LPV CAT I DA(H)	Apt Elev 1034'
Ch 99056 E27A	274°	4000' (2986')	1214' (200')	Rwy 1014'

MISSED APCH: Direct to DE491, then turn RIGHT direct to DE285 (MAX 230 KT until DE285), then to ERF. Cross ERF at 5000'.

4600 MSA ARP

Alt Set: hPa (IN on req) | Rwy Elev: 37 hPa | Trans level: By ATC | Trans alt: 5000'

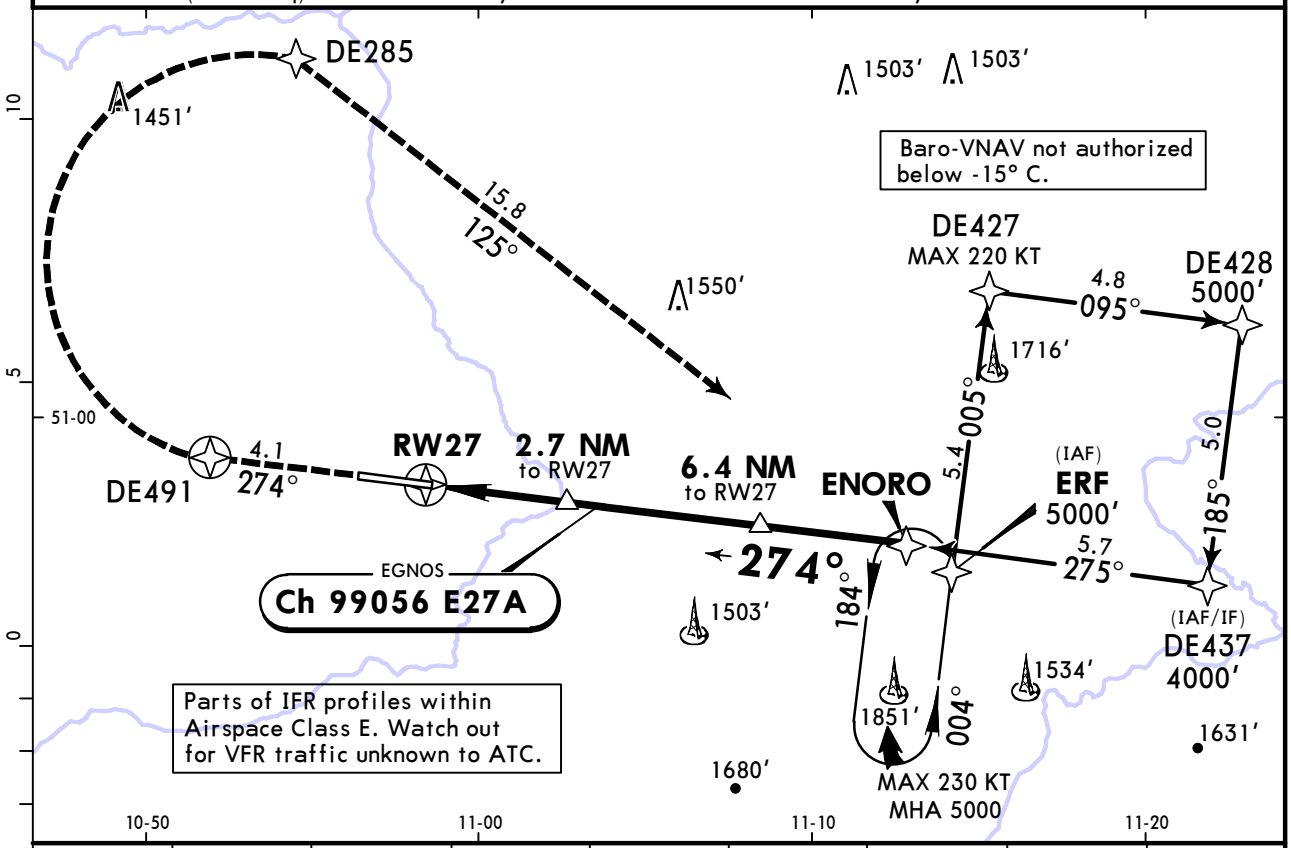

DIST to RW27	2.0	3.0	4.0	5.0	6.0	7.0	8.0	9.0
ALTITUDE	1705'	2023'	2340'	2657'	2975'	3293'	3611'	3930'

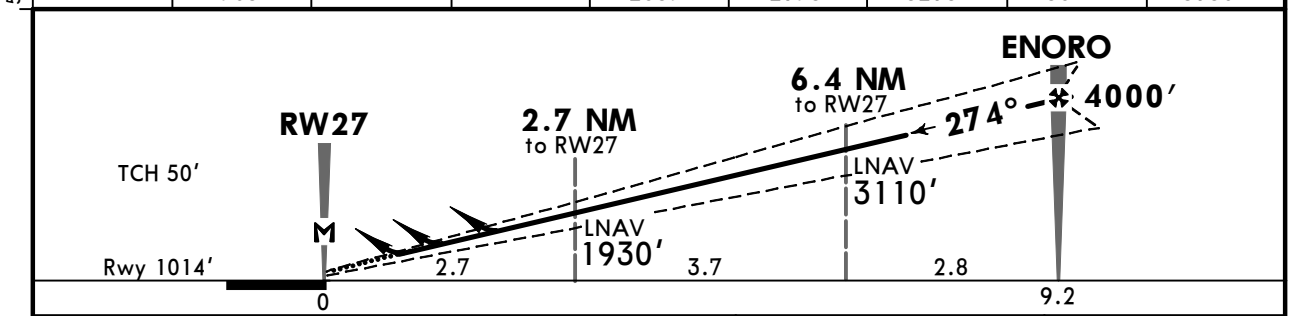

Gnd speed-Kts		70	90	100	120	140	160
Glide Path Angle	3.00°	372	478	531	637	743	849
MAP at RW27							

ALSF-II, REIL, PAPI

DE491

Standard STRAIGHT-IN LANDING RWY 27

	LPV CAT I			LNAV/VNAV		LNAV
	DA(H) 1214' (200')			DA(H) A: 1298' (284') B: 1308' (294') C: 1318' (304') D: 1327' (313')		
		TDZ or CL out	ALS out		ALS out	
A	RVR 550m		RVR 1200m	RVR 750m [2]	RVR 1400m	FOR LNAV MINIMUMS SEE 12-2A
B		[1] RVR 550m				
C						
D						

CIRCLE-TO-LAND
Not authorized
South of airport

Max Kts	MDA(H)	VIS
100	1590' (556')	1500m
135	1660' (626')	1600m
180	1760' (726')	2400m
205	1800' (766')	3600m

PANS OPS

[1] RVR 750m when a Flight Director or Autopilot or HUD to DA is not used.
[2] With TDZ & CL & HUD: CAT AB RVR 650m, CAT CD RVR 700m.

CHANGES: Speed restrictions.

© JEPPESEN, 2007, 2021. ALL RIGHTS RESERVED.

Printed from JeppView for Windows 5.3.0.0 on 08 Sep 2025; Terminal chart data cycle 16-2023 (Expired); Notice: After 17 Aug 2023, 0000Z, this chart may no longer be valid

RNP RWY 27 MINIMUMS

Standard	STRAIGHT-IN LANDING RWY **27** **LNAV** CDFA DA/MDA(H) **1420'** (406')	
		ALS out
A	RVR 1200m	RVR 1500m
B		
C		RVR 1900m
D		

CHANGES: New page.

© JEPPESEN, 2021. ALL RIGHTS RESERVED.

Printed from JeppView for Windows 5.3.0.0 on 08 Sep 2025; Terminal chart data cycle 16-2023 (Expired); Notice: After 17 Aug 2023, 0000Z, this chart may no longer be valid

EDDE/ERF
ERFURT-WEIMAR

JEPPESEN 27 AUG 21 (13-1) Eff 9 Sep

ERFURT-WEIMAR, GERMANY
VOR Rwy 09

BRIEFING STRIP ™

ATIS	MUNICH Radar (APP) South	ERFURT Tower	Ground
133.455	126.175	121.155	121.755

VOR ERF	Final Apch Crs	DEØØ8	DA/MDA(H)	Apt Elev 1034′
113.85	096°	4000′ (2977′)	1590′ (567′)	Rwy 1023′

MISSED APCH: Climb on R-276 inbound to VOR, then turn LEFT on R-090 to DE437. Then turn LEFT direct to VOR (MAX 230 KT until established inbound VOR). Cross VOR at 5000′.

Alt Set: hPa (IN on req) Rwy Elev: 37 hPa Trans level: By ATC Trans alt: 5000′

DME required.

4600 MSA ARP

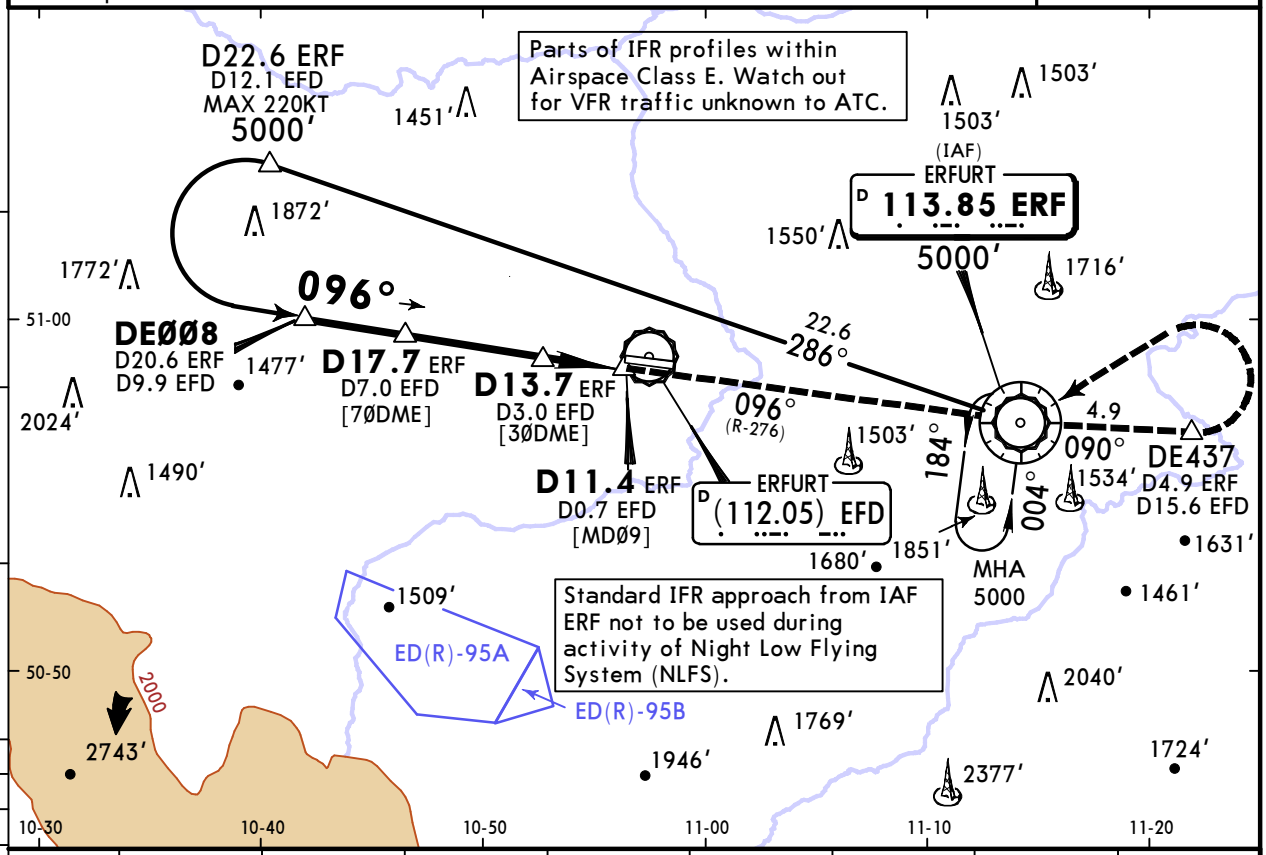

ERF DME	20.0	19.0	18.0	17.0	16.0	15.0	14.0	13.0
ALTITUDE	3807′	3489′	3170′	2852′	2533′	2215′	1896′	1578′

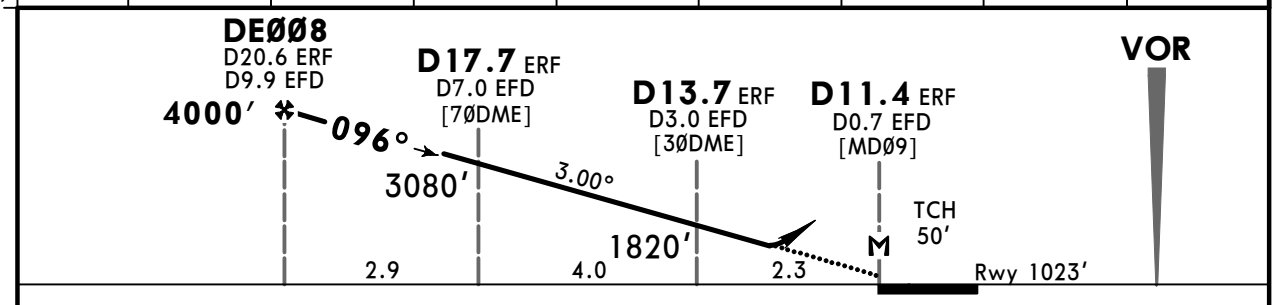

Gnd speed-Kts		70	90	100	120	140	160
Descent Angle	3.00°	372	478	531	637	743	849
MAP at D11.4 ERF/D0.7 EFD							

ALSF-II
REIL
PAPI

ERF
113.85
R-276

PANS OPS

Standard STRAIGHT-IN LANDING RWY 09

CDFA

DA/MDA(H) 1590′ (567′)

		ALS out
A	RVR 1500m	
B		
C	RVR 1900m	RVR 2400m
D		

CIRCLE-TO-LAND

Not authorized South of airport

Max Kts	MDA(H)	VIS
100	1590′ (556′)	1500m
135	1660′ (626′)	1600m
180	1760′ (726′)	2400m
205	1800′ (766′)	3600m

CHANGES: New procedure.

© JEPPESEN, 2021. ALL RIGHTS RESERVED.

Printed from JeppView for Windows 5.3.0.0 on 08 Sep 2025; Terminal chart data cycle 16-2023 (Expired); Notice: After 17 Aug 2023, 0000Z, this chart may no longer be valid

EDDE/ERF
ERFURT-WEIMAR

JEPPESEN ERFURT-WEIMAR, GERMANY
27 AUG 21 (13-2) Eff 9 Sep
VOR Rwy 27

BRIEFING STRIP ™

ATIS	MUNICH Radar (APP)	ERFURT Tower	Ground
133.455	South 126.175	121.155	121.755

VOR ERF	Final Apch Crs	DEØ37	DA/MDA(H)	Apt Elev 1034′
113.85	276°	4000′ (2986′)	1420′ (406′)	Rwy 1014′

MISSED APCH: Climb on R-276 to DE491, then turn RIGHT on heading 059° to intercept R-305 (MAX 230 KT until established on R-305), turn RIGHT on R-305 inbound to VOR. Cross VOR at 5000′.

Alt Set: hPa (IN on req) Rwy Elev: 37 hPa Trans level: By ATC Trans alt: 5000′
DME required.

4600
MSA ARP

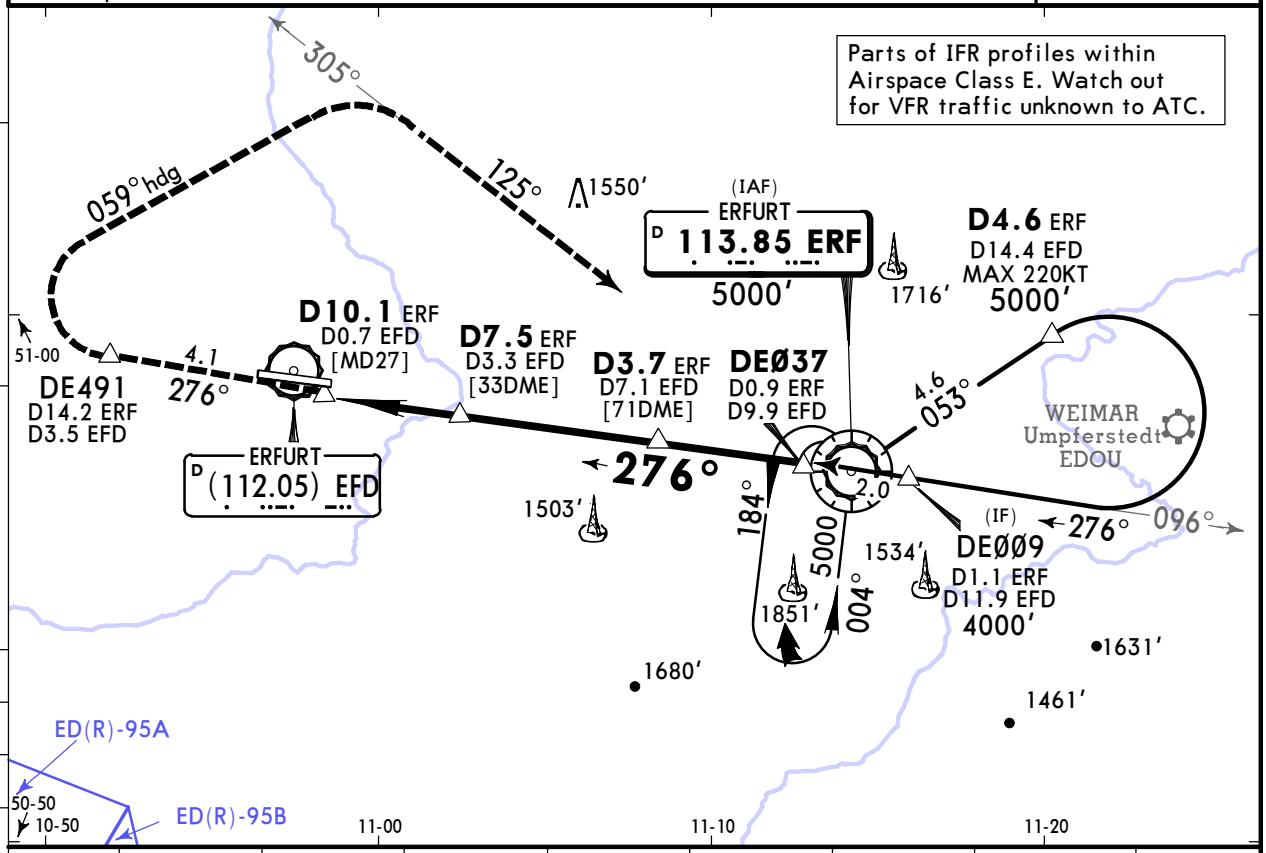

ERF DME	8.0	7.0	6.0	5.0	4.0	3.0	2.0	1.0
ALTITUDE	1741′	2059′	2378′	2696′	3014′	3333′	3651′	3970′

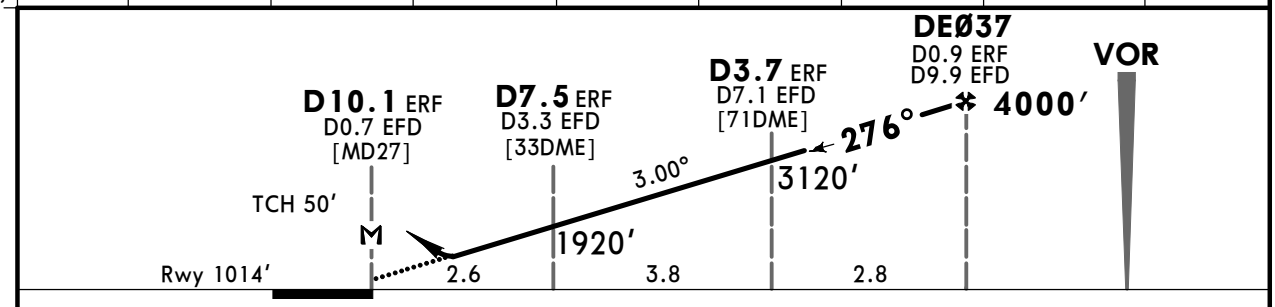

Gnd speed-Kts		70	90	100	120	140	160
Descent Angle	3.00°	372	478	531	637	743	849
MAP at D10.1 ERF/D0.7 EFD							

ALSF-II
REIL
PAPI

DE491 on ERF 113.85 R-276

Standard STRAIGHT-IN LANDING RWY 27
CDFA
DA/MDA(H) 1420′ (406′)

		ALS out
A	RVR 1200m	RVR 1500m
B		
C		RVR 1900m
D		

CIRCLE-TO-LAND
Not authorized
South of airport

Max Kts	MDA(H)	VIS
100	1590′ (556′)	1500m
135	1660′ (626′)	1600m
180	1760′ (726′)	2400m
205	1800′ (766′)	3600m

PANS OPS

CHANGES: Rwy designation. MSA. Procedure. Circling minimums.

© JEPPESEN, 1999, 2021. ALL RIGHTS RESERVED.

(c) JEPPESEN SANDERSON, INC., 2025, ALL RIGHTS RESERVED

Chart changes since cycle 15-2023

ADD = added chart, REV = revised chart, DEL = deleted chart.

ACT	PROCEDURE IDENT	INDEX	REV DATE	EFF DATE

ERFURT-WEIMAR, (ERFURT-WEIMAR - EDDE)

(c) JEPPESEN SANDERSON, INC., 2025, ALL RIGHTS RESERVED

TERMINAL CHART CHANGE NOTICES

No Chart Change Notices for Airport EDDE

Chart Change Notices for Country DEU

Type: Gen Tmnl
Effectivity: Permanent
Begin Date: Immediately
End Date: No end date

Location/airport name changed from Monchengladbach to Moenchengladbach.

Type: Gen Tmnl
Effectivity: Permanent
Begin Date: 20210326
End Date: No end date

Use of SID RNAV OVERLAY: Pilots of GPS/FMS-RNAV-equipped aircraft should, if possible, use the defined supplementary GPS/FMS/RNAV procedures which are published as "OVERLAY" to a conventional procedure. Please refer also to ATC Germany pages for additional information.

Type: Gen Tmnl
Effectivity: Permanent
Begin Date: Immediately
End Date: No end date

Location/airport name changed from Buchel to Buechel, Buckeburg to Bueckeburg, Norvenich to Noervenich.

Type: Gen Tmnl
Effectivity: Temporary
Begin Date: Immediately
End Date: Until Further Notice

Jeppesen charted take-off minimums are determined according to the available RWY lights. In Germany, Low Visibility Procedures (LVP) are only available for the following airports: EDDB, EDDC, EDDE, EDDF, EDDG, EDDH, EDDK, EDDL, EDDM, EDDN, EDDP, EDDR, EDDS, EDDV, EDDW, EDFH, EDHI, EDHL, EDJA, EDLN, EDLP, EDLV, EDLW, EDMA, EDNY, EDQM, EDSB, EDTL, EDTY, EDVE, EDVK. All other German airports are notapproved for Low Visibility Take-off Operations (LVTO) with an RVR below 400m because of missing LVP.