(c) JEPPESEN SANDERSON, INC., 2025, ALL RIGHTS RESERVED

List of pages in this Trip Kit

Trip Kit Index
Airport Information For EDNY
Terminal Charts For EDNY
Revision Letter For Cycle 16-2023
Change Notices
Notebook

(c) JEPPESEN SANDERSON, INC., 2025, ALL RIGHTS RESERVED

General Information

Location: FRIEDRICHSHAFEN DEU
ICAO/IATA: EDNY / FDH
Lat/Long: N47° 40.28', E009° 30.69'
Elevation: 1368 ft

Airport Use: Public
Daylight Savings: Observed
UTC Conversion: -1:00 = UTC
Magnetic Variation: 2.0° E

Fuel Types: 100 Octane (LL), Jet A-1
Repair Types: Major Airframe, Major Engine
Customs: Yes
Airport Type: IFR
Landing Fee: Yes
Control Tower: Yes
Jet Start Unit: No
LLWS Alert: No
Beacon: Yes

Sunrise: 0449 Z
Sunset: 1751 Z

Runway Information

Runway: 06
Length x Width: 7730 ft x 148 ft
Surface Type: asphalt
TDZ-Elev: 1335 ft
Lighting: Edge, ALS, Centerline, REIL
Displaced Threshold: 886 ft

Runway: 24
Length x Width: 7730 ft x 148 ft
Surface Type: asphalt
TDZ-Elev: 1368 ft
Lighting: Edge, ALS, Centerline, REIL, TDZ
Displaced Threshold: 676 ft

Communication Information

ATIS: 129.605
Friedrichshafen Tower: 120.080
Friedrichshafen Tower: 134.305
Alps Radar Zurich ACC: 119.925 RCO

Printed from JeppView for Windows 5.3.0.0 on 08 Sep 2025; Terminal chart data cycle 16-2023 (Expired); Notice: After 17 Aug 2023, 0000Z, this chart may no longer be valid

EDNY/FDH
FRIEDRICHSHAFEN

JEPPESEN **FRIEDRICHSHAFEN, GERMANY**

13 MAY 22 | 10-2 | Eff 19 May | **STAR**

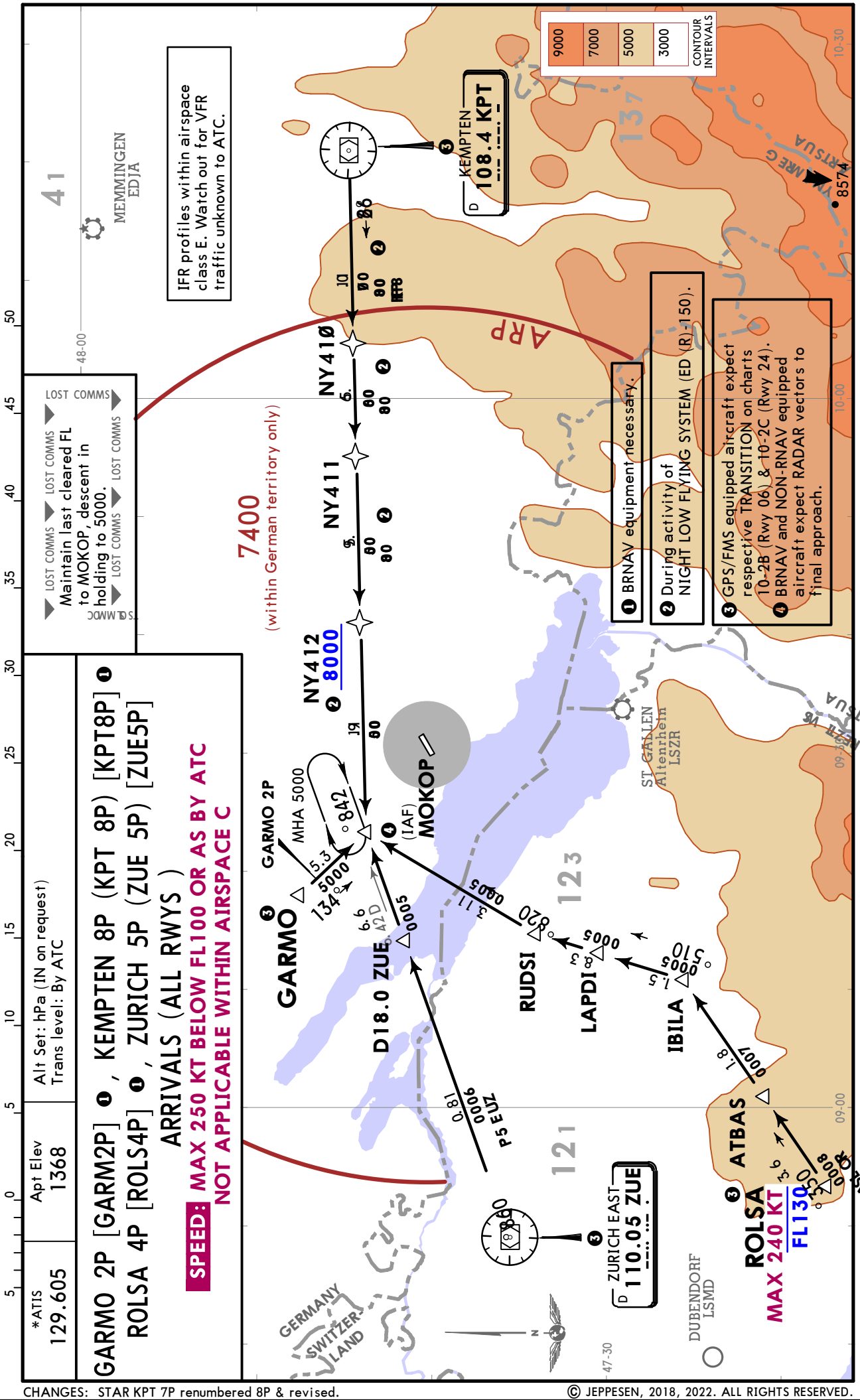

CHANGES: STAR KPT 7P renumbered 8P & revised.

© JEPPESEN, 2018, 2022. ALL RIGHTS RESERVED.

Printed from JeppView for Windows 5.3.0.0 on 08 Sep 2025; Terminal chart data cycle 16-2023 (Expired); Notice: After 17 Aug 2023, 0000Z, this chart may no longer be valid

LOST COMMS ▼ LOST COMMS ▼ LOST COMMS ▼ LOST COMMS ▼ LOST COM

When being RADAR vectored to a waypoint without subsequent clearance received, resume own navigation to rejoin transition in the most direct way and proceed in accordance with lateral description and altitudes with subsequent final of a conventional standard instrument approach procedure.

LOST COMMS ▲ LOST COMMS ▲ LOST COMMS ▲ LOST COMMS ▲ LOST COMMS ▲

*ATIS	Apt Elev
129.605	1368

Alt Set: hPa (IN on request) Trans level: By ATC
1. **GPS- or FMS-equipped aircraft.**
2. Level assignments will be issued by ATC.
3. If not cleared for a GPS/FMS RNAV STAR by ATC, the filed STAR has to be used.

GARMO 06 [GARMØ6], KPT 06 [KPTØ6]
ROLSA 06 [ROLSØ6], ZUE 06 [ZUEØ6]
RWY 06 RNAV TRANSITIONS

BY ATC

SPEED: MAX 250 KT BELOW FL100 OR AS BY ATC
NOT APPLICABLE WITHIN AIRSPACE C

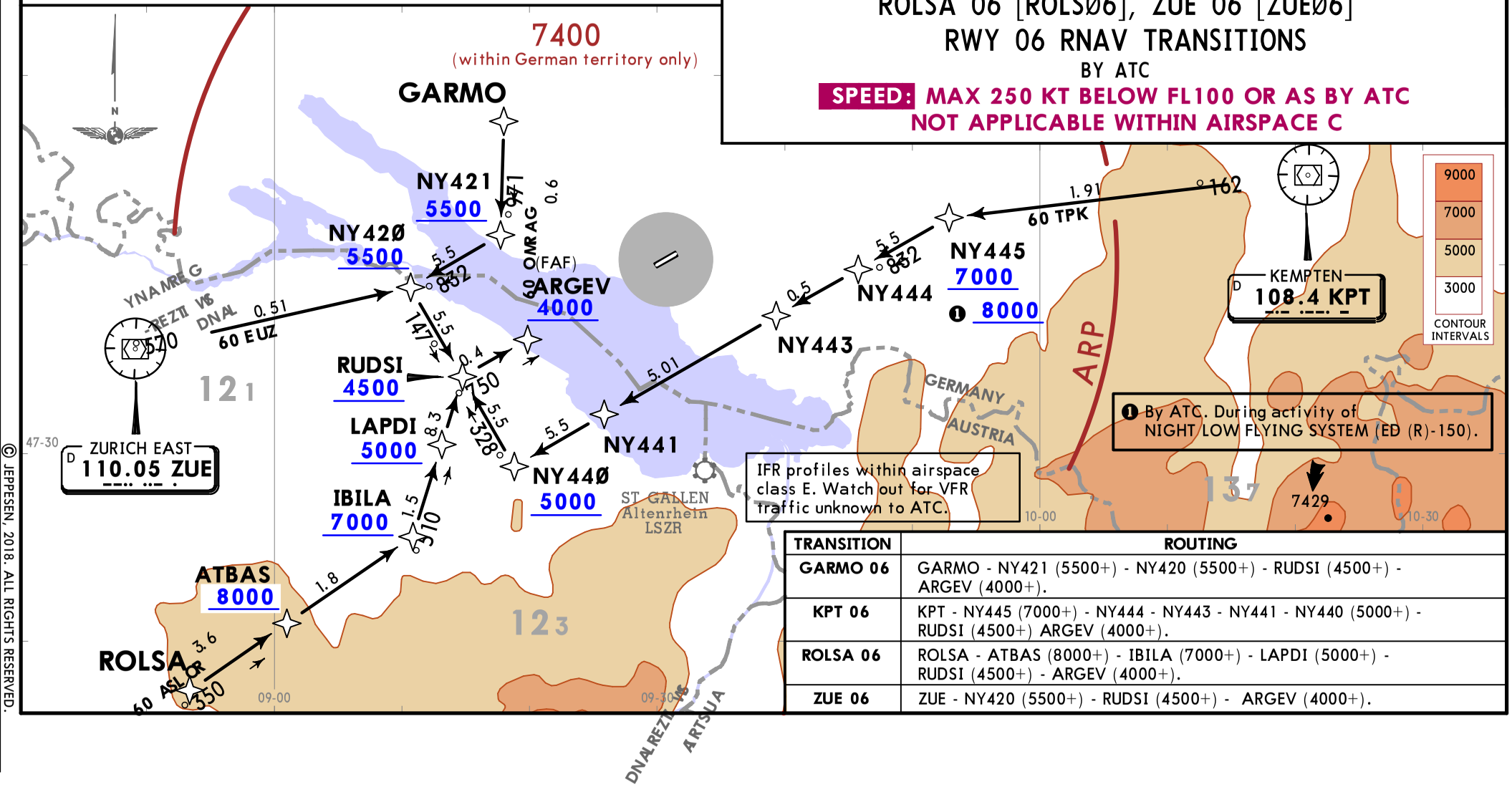

TRANSITION	ROUTING
GARMO 06	GARMO - NY421 (5500+) - NY420 (5500+) - RUDSI (4500+) - ARGEV (4000+).
KPT 06	KPT - NY445 (7000+) - NY444 - NY443 - NY441 - NY440 (5000+) - RUDSI (4500+) ARGEV (4000+).
ROLSA 06	ROLSA - ATBAS (8000+) - IBILA (7000+) - LAPDI (5000+) - RUDSI (4500+) - ARGEV (4000+).
ZUE 06	ZUE - NY420 (5500+) - RUDSI (4500+) - ARGEV (4000+).

CHANGES: ATIS.

© JEPPESEN, 2018. ALL RIGHTS RESERVED.

Printed from JeppView for Windows 5.3.0.0 on 08 Sep 2025; Terminal chart data cycle 16-2023 (Expired); Notice: After 17 Aug 2023, 0000Z, this chart may no longer be valid

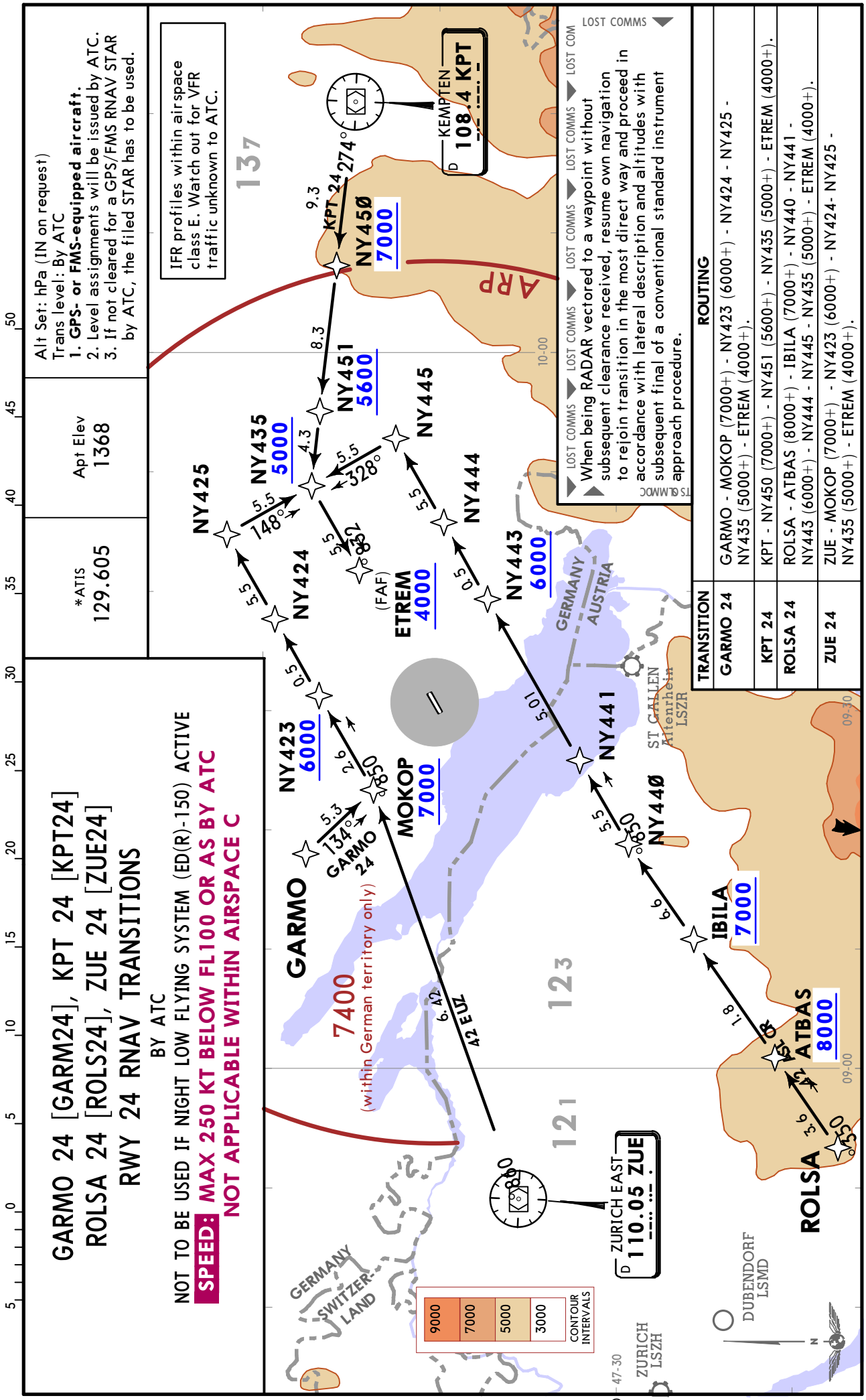

© JEPPESEN, 2018. ALL RIGHTS RESERVED.

Printed from JeppView for Windows 5.3.0.0 on 08 Sep 2025; Terminal chart data cycle 16-2023 (Expired); Notice: After 17 Aug 2023, 0000Z, this chart may no longer be valid

ALPS Radar (APP) 119.925	Apt Elev 1368	Trans alt: 5000
		RNAV-1 or RNP-1 or A-RNP equivalent. GPS required. DME/DME, DME/DME/IRU not authorized.
		1. Contact ALPS Radar when advised by Tower. 2. SIDs are also noise abatement routings. Strict adherence within the limits of aircraft performance is mandatory. 3. WARNING: Close-in obstacles.

ALAGO 7E [ALAG7E], ALAGO 7W [ALAG7W] RNAV DEPARTURES (ALL RWYS)

SPEED: MAX 250 KT BELOW FL100 OR AS BY ATC NOT APPLICABLE WITHIN AIRSPACE C

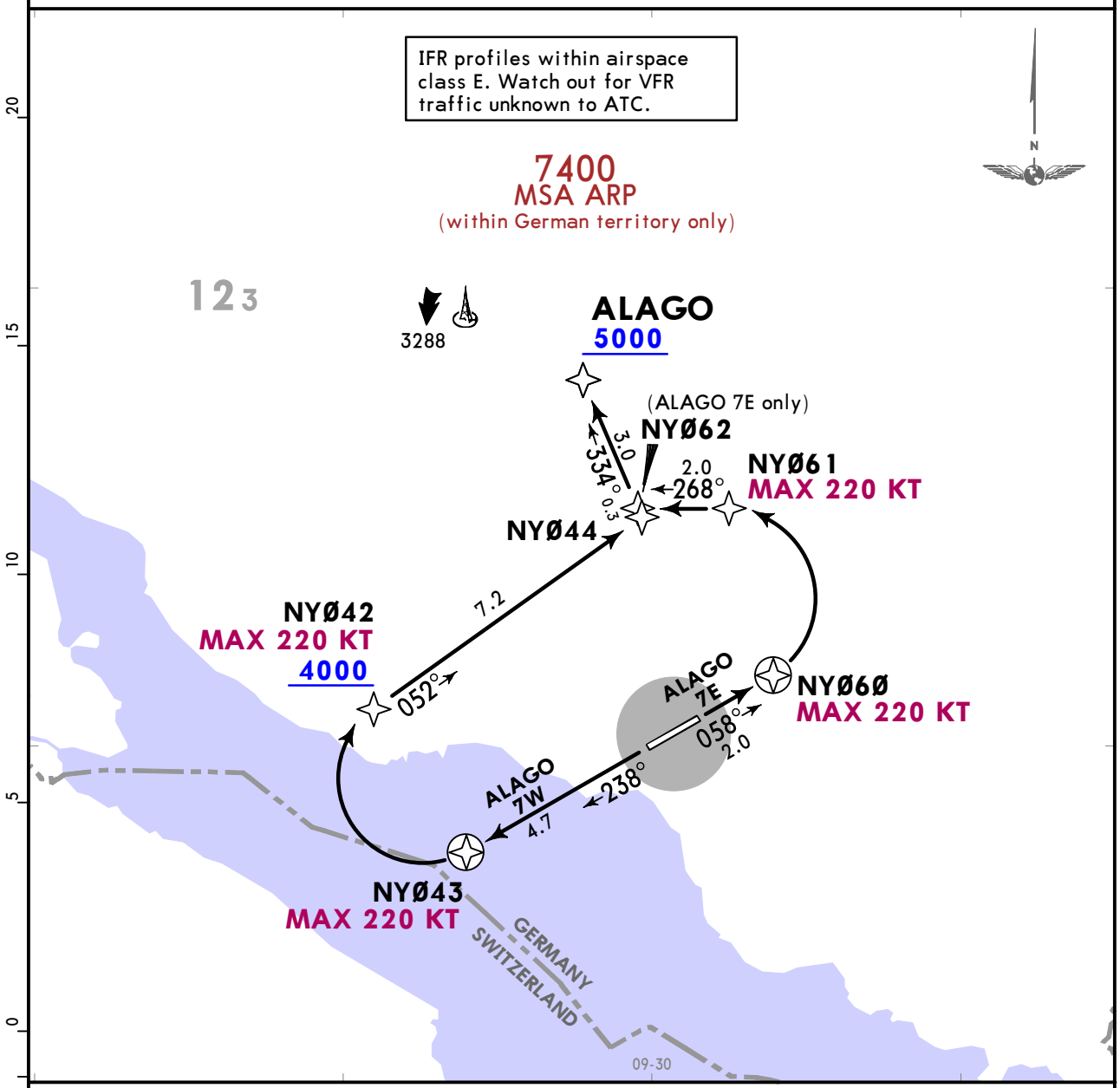

These SIDs require minimum climb gradients of

ALAGO 7E
210 per NM (3.4%) up to 2200.

ALAGO 7W
270 per NM (4.4%) due to airspace structure.

Gnd speed-KT	75	100	150	200	250	300
210 per NM	263	350	525	700	875	1050
270 per NM	338	450	675	900	1125	1350

If unable to comply, advise ATC prior start-up.

Initial climb clearance **5000**

SID	RWY	ROUTING
ALAGO 7E	**06**	On 058° track to NYØ6Ø, turn LEFT, direct to NYØ61, to NYØ62, to ALAGO.
ALAGO 7W	**24**	On 238° track to NYØ43, turn RIGHT, direct to NYØ42, to NYØ44, to ALAGO.

CHANGES: RNAV SIDs renumbered & revised.

© JEPPESEN, 2018, 2022. ALL RIGHTS RESERVED.

Printed from JeppView for Windows 5.3.0.0 on 08 Sep 2025; Terminal chart data cycle 16-2023 (Expired); Notice: After 17 Aug 2023, 0000Z, this chart may no longer be valid

ALPS Radar (APP) 119.925	Apt Elev 1368	Trans alt: 5000
		RNAV-1 or RNP-1 or A-RNP equivalent. GPS required. DME/DME, DME/DME/IRU not authorized.
		1. Contact ALPS Radar when advised by Tower. 2. SIDs are also noise abatement routings. Strict adherence within the limits of aircraft performance is mandatory. 3. WARNING: Close-in obstacles. 4. MOKOP 3W: If unable to comply advise ATC prior start-up.

MOKOP 4E [MOKO4E]
MOKOP 3W [MOKO3W]
RNAV DEPARTURES
(ALL RWYS)

SPEED: MAX 250 KT BELOW FL100 OR AS BY ATC
NOT APPLICABLE WITHIN AIRSPACE C

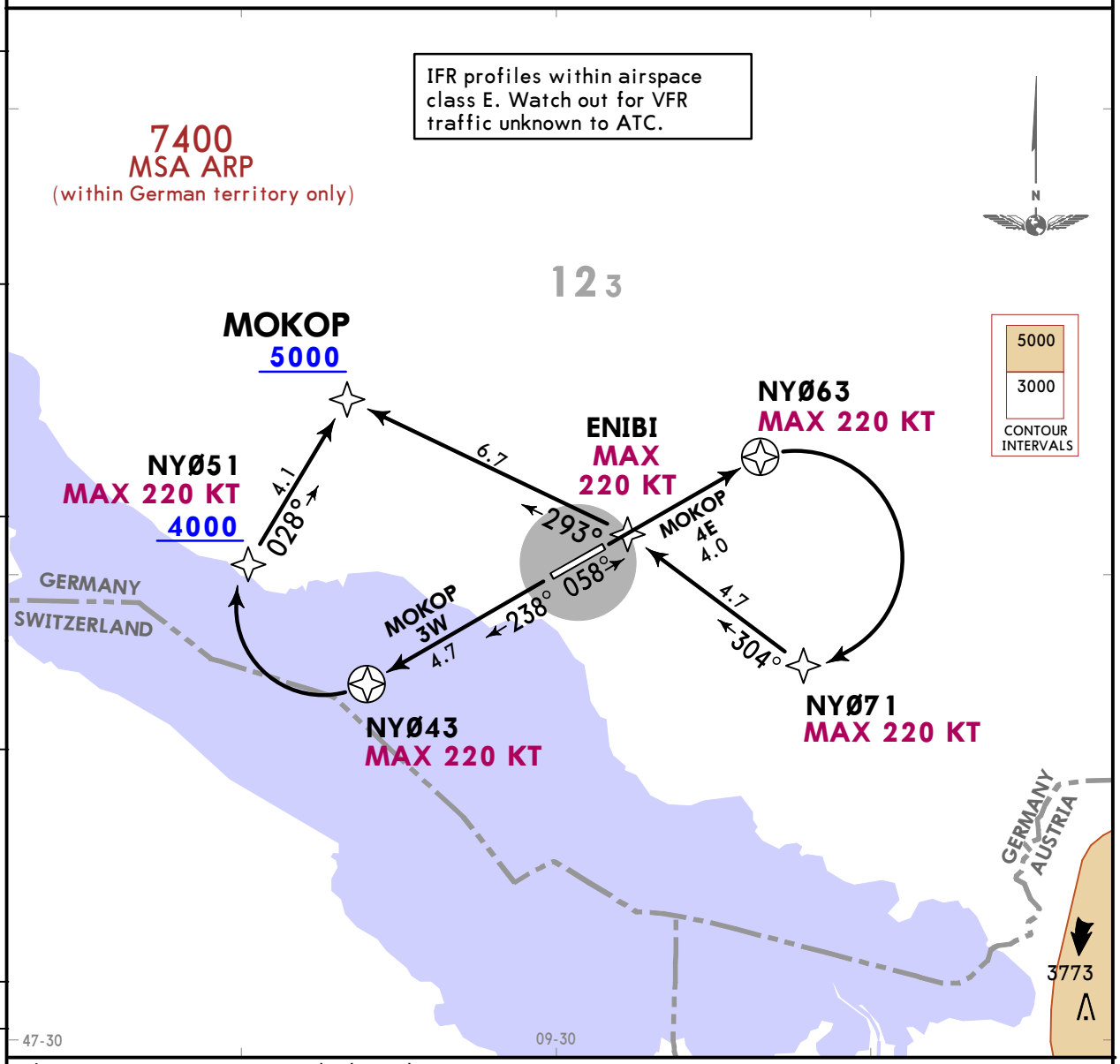

These SIDs require minimum climb gradients of

MOKOP 4E
210 per NM (3.4%) up to 2200.
MOKOP 3W
315 per NM (5.2%) due to airspace structure.

Gnd speed-KT	75	100	150	200	250	300
210 per NM	263	350	525	700	875	1050
315 per NM	394	525	788	1050	1313	1575

Initial climb clearance **5000**

SID	RWY	ROUTING
MOKOP 4E	**06**	On 058° track to NYØ63, turn RIGHT, direct to NYØ71, to ENEBI, to MOKOP.
MOKOP 3W	**24**	On 238° track to NYØ43, turn RIGHT, direct to NYØ51, to MOKOP.

CHANGES: RNAV SID MOKOP 3E renumbered 4E & revised.

© JEPPESEN, 2018, 2022. ALL RIGHTS RESERVED.

Printed from JeppView for Windows 5.3.0.0 on 08 Sep 2025; Terminal chart data cycle 16-2023 (Expired); Notice: After 17 Aug 2023, 0000Z, this chart may no longer be valid

ALPS Radar (APP) 119.925	Apt Elev 1368	Trans alt: 5000
		RNAV-1 or RNP-1 or A-RNP equivalent. GPS required. DME/DME, DME/DME/IRU not authorized.
		1. Contact ALPS Radar when advised by Tower. 2. SIDs are also noise abatement routings. Strict adherence within the limits of aircraft performance is mandatory. 3. WARNING: Close-in obstacles.

SITOR 3E [SITO3E], SITOR 2W [SITO2W]
RNAV DEPARTURES
(ALL RWYS)

ONLY FOR FLIGHTS TO LSZR

SPEED: MAX 250 KT BELOW FL100 OR AS BY ATC
NOT APPLICABLE WITHIN AIRSPACE C

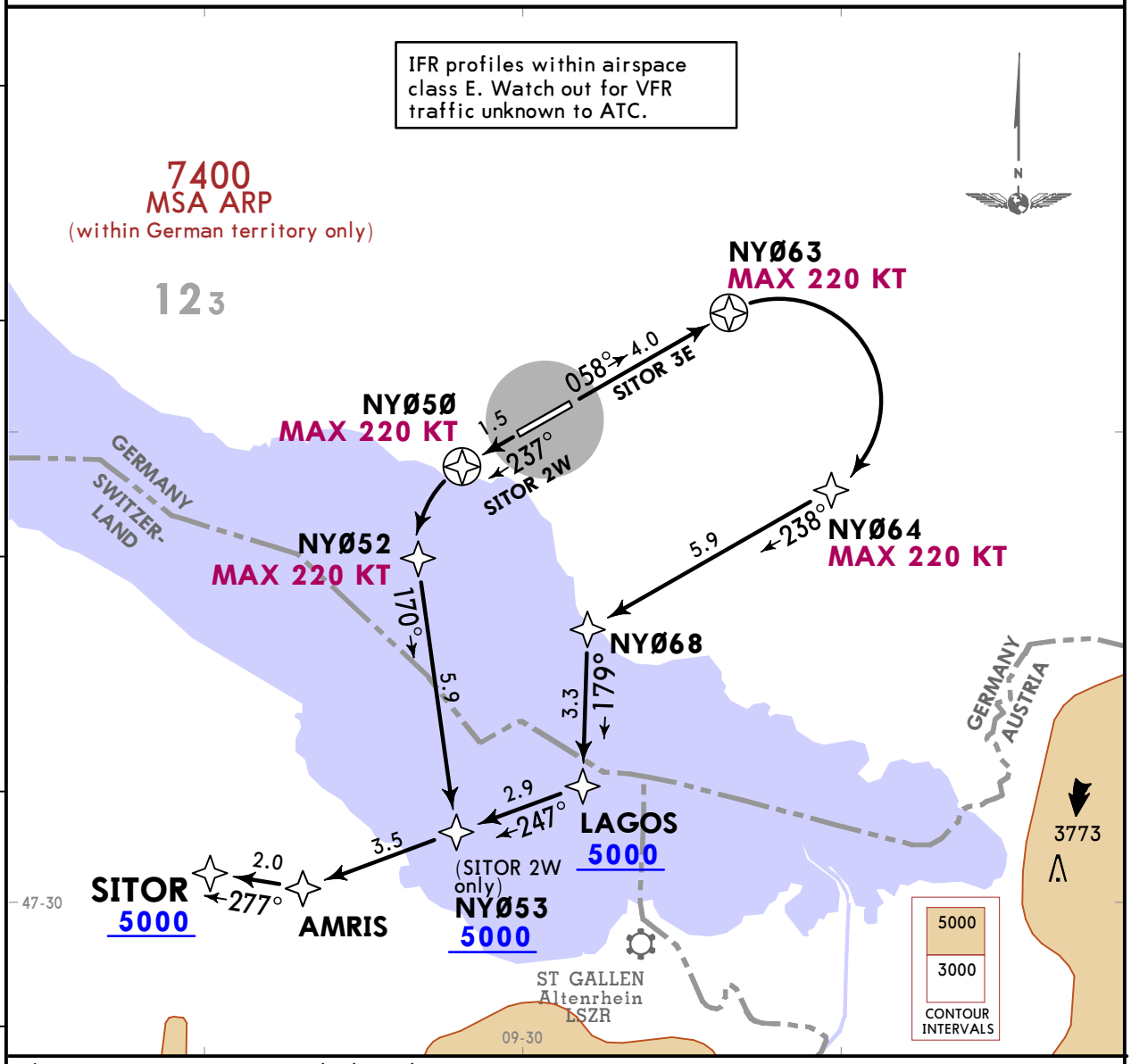

These SIDs require minimum climb gradients of

SITOR 3E
210 per NM (3.4%) up to 2200.
SITOR 2W
380 per NM (6.2%) due to airspace structure.

Gnd speed-KT	75	100	150	200	250	300
210 per NM	263	350	525	700	875	1050
380 per NM	475	633	950	1267	1583	1900

If unable to comply, advise ATC prior start-up.

Initial climb clearance **5000**

SID	RWY	ROUTING
SITOR 3E	**06**	On 058° track to NYØ63, turn RIGHT, direct to NYØ64, to NYØ68, to LAGOS, to AMRIS, to SITOR.
SITOR 2W	**24**	On 237° track to NYØ5Ø, turn LEFT, direct to NYØ52, to NYØ53, to AMRIS, to SITOR.

CHANGES: RNAV SID SITOR 2E renumbered 3E & revised.

© JEPPESEN, 2018, 2022. ALL RIGHTS RESERVED.

Printed from JeppView for Windows 5.3.0.0 on 08 Sep 2025; Terminal chart data cycle 16-2023 (Expired); Notice: After 17 Aug 2023, 0000Z, this chart may no longer be valid

ALPS Radar (APP) 119.925	Apt Elev 1368	
		Trans alt: 5000
		RNAV-1 or RNP-1 or A-RNP equivalent. GPS required. DME/DME, DME/DME/IRU not authorized.
		1. Contact ALPS Radar when advised by Tower. 2. SIDs are also noise abatement routings. Strict adherence within the limits of aircraft performance is mandatory. 3. WARNING: Close-in obstacles. 4. TRA 3W: If unable to comply, advise ATC prior start-up.

These SIDs require minimum climb gradients of

TRA 4E

210 per NM (3.4%) up to 2200.

TRA 3W

280 per NM (4.6%) due to airspace.

Gnd speed-KT	75	100	150	200	250	300
210 per NM	263	350	525	700	875	1050
280 per NM	350	467	700	933	1167	1400

TRASADINGEN 4E (TRA 4E), TRASADINGEN 3W (TRA 3W) RNAV DEPARTURES (ALL RWYS)

SPEED: MAX 250 KT BELOW FL100 OR AS BY ATC
NOT APPLICABLE WITHIN AIRSPACE C

IFR profiles within airspace class E. Watch out for VFR traffic unknown to ATC.

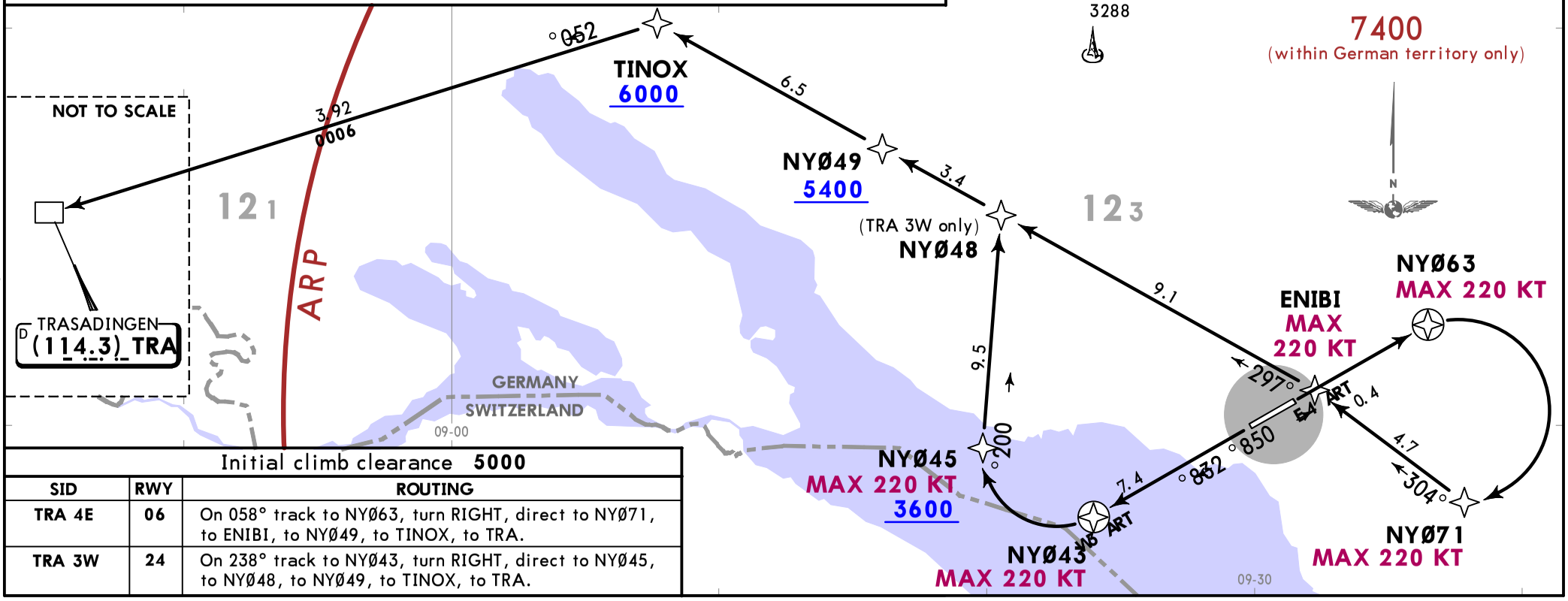

Initial climb clearance **5000**

SID	RWY	ROUTING
TRA 4E	06	On 058° track to NYØ63, turn RIGHT, direct to NYØ71, to ENIBI, to NYØ49, to TINOX, to TRA.
TRA 3W	24	On 238° track to NYØ43, turn RIGHT, direct to NYØ45, to NYØ48, to NYØ49, to TINOX, to TRA.

CHANGES: RNAV SID TRA 3E renumbered 4E & revised.

© JEPPESEN, 2018, 2022. ALL RIGHTS RESERVED.

Printed from JeppView for Windows 5.3.0.0 on 08 Sep 2025; Terminal chart data cycle 16-2023 (Expired); Notice: After 17 Aug 2023, 0000Z, this chart may no longer be valid

ALPS Radar (APP)	Apt Elev
119.925	1368

Trans alt: 5000
1. Contact ALPS Radar when advised by Tower.
2. SIDs are also noise abatement routings. Strict adherence within the limits of aircraft performance is mandatory. 3. WARNING: Close-in obstacles.
4. AMIKI 4W: If unable to comply advise ATC before start-up.

AMIKI 4E
This SID requires a minimum climb gradient of
210 per NM (3.4%) up to 2200.

Gnd speed-KT	75	100	150	200	250	300
210 per NM	263	350	525	700	875	1050

AMIKI 4E, AMIKI 4W
DEPARTURES (ALL RWYS)

SPEED: MAX 250 KT BELOW FL100 OR AS BY ATC
NOT APPLICABLE WITHIN AIRSPACE C

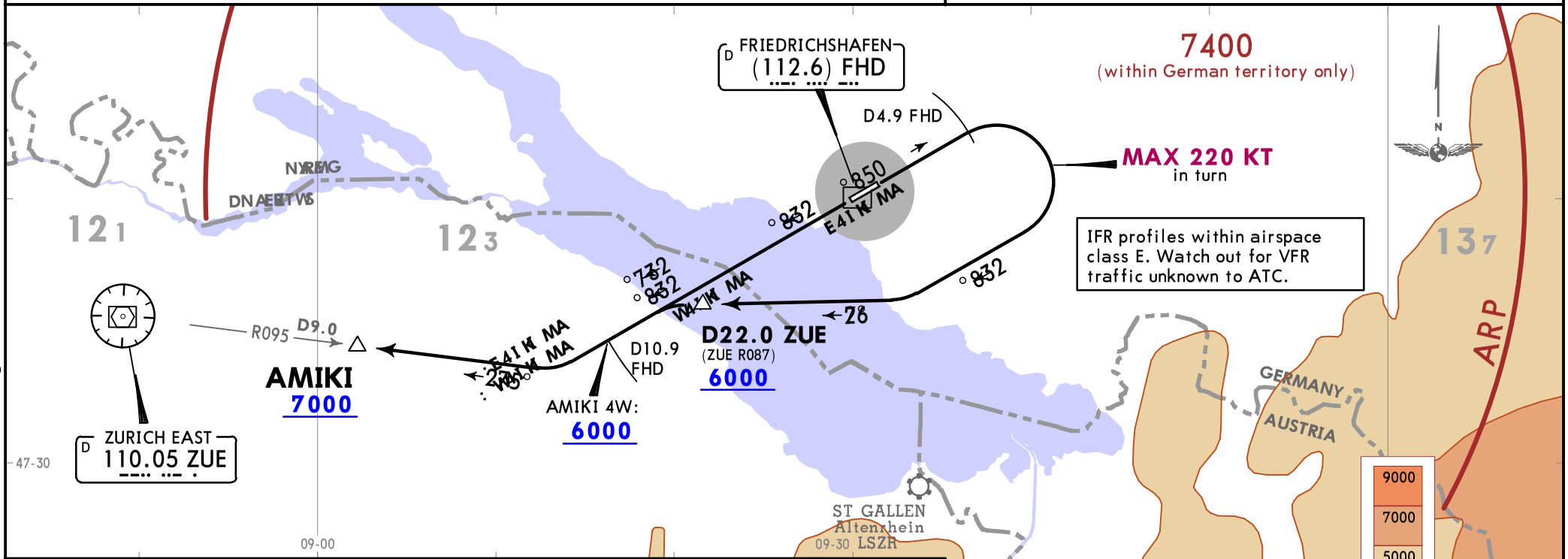

Initial climb clearance **5000**

SID	RWY	ROUTING
AMIKI 4E	**06**	On 058° track to D4.9 FHD, turn RIGHT, 238° track, intercept ZUE R087 inbound to D22.0 ZUE, turn LEFT, 237° track, intercept ZUE R095 inbound to AMIKI.
AMIKI 4W	**24**	On 238° track D10.9 FHD, turn RIGHT, intercept ZUE R095 inbound to AMIKI.

CHANGES: SIDs renumbered & revised.

© JEPPESEN, 2018, 2022. ALL RIGHTS RESERVED.

Printed from JeppView for Windows 5.3.0.0 on 08 Sep 2025; Terminal chart data cycle 16-2023 (Expired); Notice: After 17 Aug 2023, 0000Z, this chart may no longer be valid

ALPS Radar (APP)	Apt Elev	
119.925	1368	Trans alt: 5000 1. Contact ALPS Radar when advised by Tower. 2. SIDs are also noise abatement routings. Strict adherence within the limits of aircraft performance is mandatory. 3. WARNING: Close-in obstacles. 4. If unable to comply advise ATC before start-up.

BEMKI 4E, BEMKI 4W
DEPARTURES (ALL RWYS)

SPEED: MAX 250 KT BELOW FL100 OR AS BY ATC
NOT APPLICABLE WITHIN AIRSPACE C

❶ During activity of NIGHT LOW FLYING SYSTEM (ED (R)-150).

IFR profiles within airspace class E. Watch out for VFR traffic unknown to ATC.

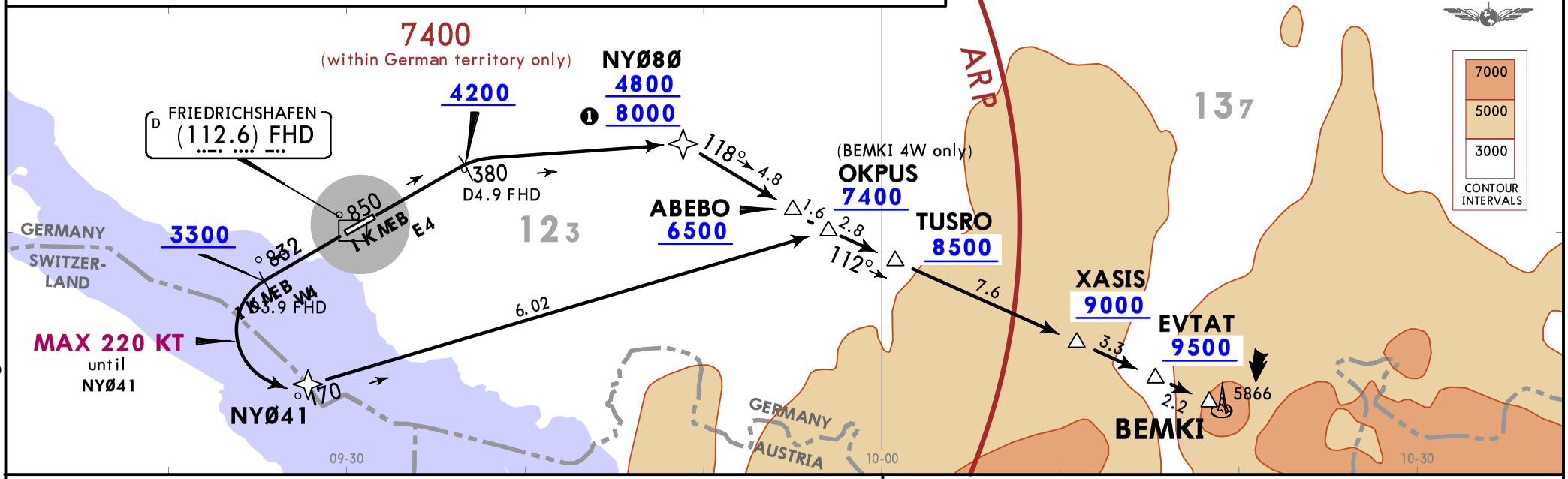

Initial climb clearance **5000**

SID	RWY	ROUTING
BEMKI 4E	**06**	On 058° track to D4.9 FHD ❷, turn RIGHT, 083° track to NYØ8Ø, turn RIGHT, 118° track via ABEBO to OKPUS, turn LEFT, 112° track via TUSRO, XASIS and EVTAT to BEMKI.
BEMKI 4W	**24**	On 238° track to D3.9 FHD ❸, turn LEFT, 071° track via NYØ41 to OKPUS, turn RIGHT, 112° track via TUSRO, XASIS and EVTAT to BEMKI.

❷ After D4.9 FHD BRNAV equipment necessary.
❸ After D3.9 FHD BRNAV equipment necessary.

BEMKI 4E
This SID requires a minimum climb gradient of
210 per NM (3.4%) up to 2200.

Gnd speed-KT	75	100	150	200	250	300
210 per NM	263	350	525	700	875	1050

CHANGES: SIDs renumbered & revised.

© JEPPESEN, 2018, 2022. ALL RIGHTS RESERVED.

Printed from JeppView for Windows 5.3.0.0 on 08 Sep 2025; Terminal chart data cycle 16-2023 (Expired); Notice: After 17 Aug 2023, 0000Z, this chart may no longer be valid

ALPS Radar (APP)	Apt Elev
119.925	1368

Trans alt: 5000
1. Contact ALPS Radar when advised by Tower.
2. SIDs are also noise abatement routings. Strict adherence within the limits of aircraft performance is mandatory. 3. WARNING: Close-in obstacles.
4. If unable to comply advise ATC before start-up.

KEMPTEN 6E (KPT 6E), KEMPTEN 6W (KPT 6W) DEPARTURES (ALL RWYS)

SPEED: MAX 250 KT BELOW FL100 OR AS BY ATC NOT APPLICABLE WITHIN AIRSPACE C

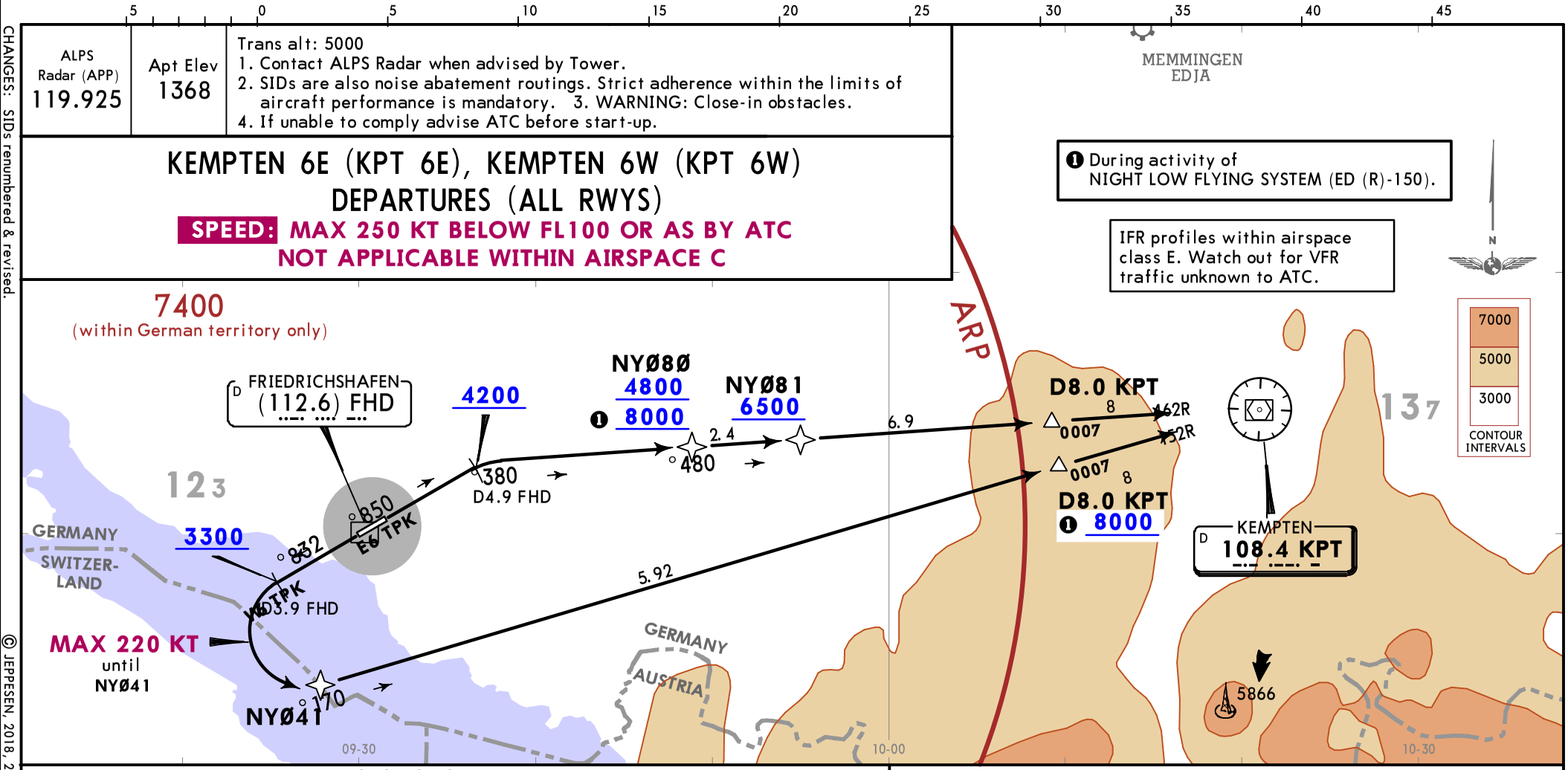

Initial climb clearance **5000**

SID	RWY	ROUTING
KPT 6E	06	On 058° track to D4.9 FHD ❷, turn RIGHT, 083° track to NYØ8Ø, intercept KPT R264 inbound via NYØ81 to KPT.
KPT 6W	24	On 238° track to D3.9 FHD ❸, turn LEFT, intercept KPT R251 inbound to KPT.

❷ After D4.9 FHD BRNAV equipment necessary.
❸ After D3.9 FHD BRNAV equipment necessary.

KPT 6E

This SID requires a minimum climb gradient of
210 per NM (3.4%) up to 2200.

Gnd speed-KT	75	100	150	200	250	300
210 per NM	263	350	525	700	875	1050

CHANGES: SIDs renumbered & revised.

© JEPPESEN, 2018, 2022. ALL RIGHTS RESERVED.

Printed from JeppView for Windows 5.3.0.0 on 08 Sep 2025; Terminal chart data cycle 16-2023 (Expired); Notice: After 17 Aug 2023, 0000Z, this chart may no longer be valid

ALPS Radar (APP)	Apt Elev
119.925	1368

Trans alt: 5000
1. Contact ALPS Radar when advised by Tower.
2. SIDs are also noise abatement routings. Strict adherence within the limits of aircraft performance is mandatory. 3. WARNING: Close-in obstacles.
4. AMIKI 4W: If unable to comply advise ATC before start-up.

AMIKI 4E [AMIK4E], AMIKI 4W [AMIK4W]
RNAV DEPARTURES (OVERLAY 10-3D) (ALL RWYS)

SPEED: MAX 250 KT BELOW FL100 OR AS BY ATC
NOT APPLICABLE WITHIN AIRSPACE C

AMIKI 4E
This SID requires a minimum climb gradient of
210 per NM (3.4%) up to 2200.

Gnd speed-KT	75	100	150	200	250	300
210 per NM	263	350	525	700	250	1050

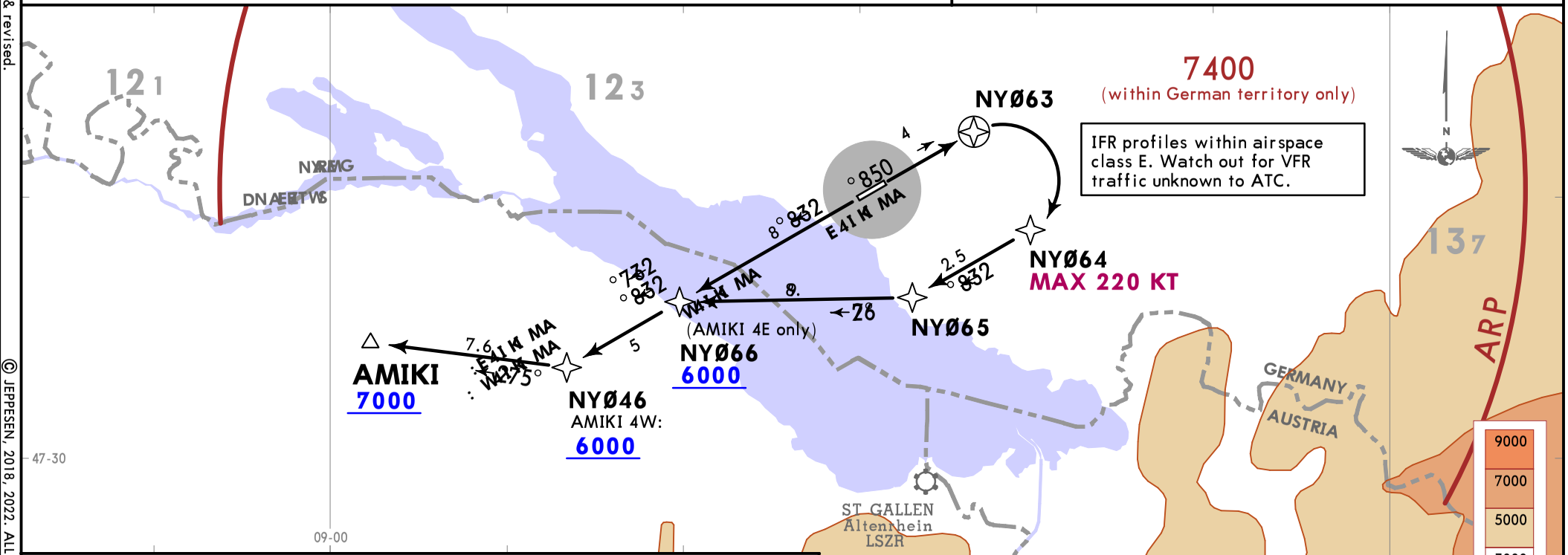

Initial climb clearance **5000**

SID	RWY	ROUTING
AMIKI 4E	**06**	(1800+) - NYØ63 - NYØ64 (K220-) - NYØ65 - NYØ66 (6000+) - NYØ46 - AMIKI (7000+).
AMIKI 4W	**24**	(1800+) - NYØ46 (6000+) - AMIKI (7000+).

CHANGES: RNAV SIDs renumbered & revised.

© JEPPESEN, 2018, 2022. ALL RIGHTS RESERVED.

Printed from JeppView for Windows 5.3.0.0 on 08 Sep 2025; Terminal chart data cycle 16-2023 (Expired); Notice: After 17 Aug 2023, 0000Z, this chart may no longer be valid

ALPS Radar (APP)	Apt Elev
119.925	1368

Trans alt: 5000
1. Contact ALPS Radar when advised by Tower.
2. SIDs are also noise abatement routings. Strict adherence within the limits of aircraft performance is mandatory. 3. WARNING: Close-in obstacles.
4. If unable to comply advise ATC before start-up.

BEMKI 4E [BEMK4E], BEMKI 4W [BEMK4W]
RNAV DEPARTURES (OVERLAY 10-3E) (ALL RWYS)

SPEED: MAX 250 KT BELOW FL100 OR AS BY ATC
NOT APPLICABLE WITHIN AIRSPACE C

❶ During activity of NIGHT LOW FLYING SYSTEM (ED (R)-150).

IFR profiles within airspace class E. Watch out for VFR traffic unknown to ATC.

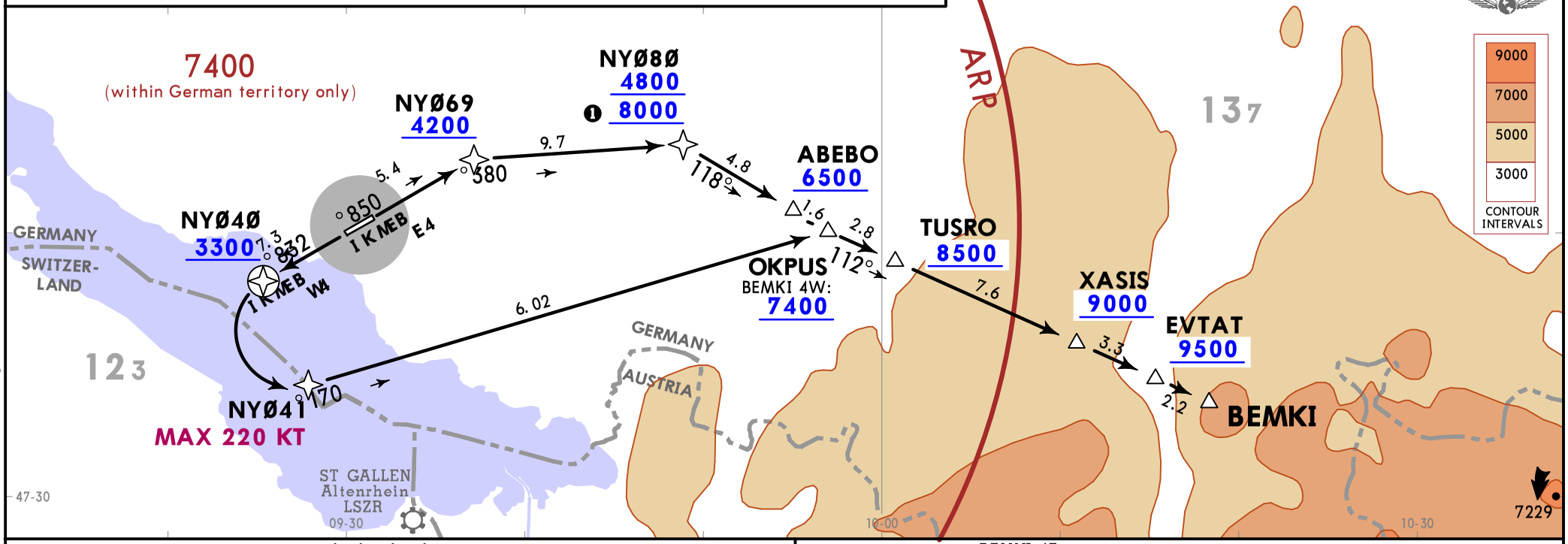

Initial climb clearance **5000**

SID	RWY	ROUTING
BEMKI 4E	**06**	(1800+) - NYØ69 (4200+) - NYØ8Ø (4800+) - ABEBO (6500+) - OKPUS - TUSRO (8500+) - XASIS (9000+) - EVTAT (9500+) - BEMKI.
BEMKI 4W	**24**	(1800+) - NYØ4Ø (3300+) - NYØ41 (K220-) - OKPUS (7400+) - TUSRO (8500+) - XASIS (9000+) - EVTAT (9500+) - BEMKI.

BEMKI 4E
This SID requires a minimum climb gradient of
210 per NM (3.4%) up to 2200.

Gnd speed-KT	75	100	150	200	250	300
210 per NM	263	350	525	700	875	1050

CHANGES: RNAV SIDs renumbered & revised.

© JEPPESEN, 2018, 2022. ALL RIGHTS RESERVED.

Printed from JeppView for Windows 5.3.0.0 on 08 Sep 2025; Terminal chart data cycle 16-2023 (Expired); Notice: After 17 Aug 2023, 0000Z, this chart may no longer be valid

ALPS Radar (APP)	Apt Elev
119.925	1368

Trans alt: 5000
1. Contact ALPS Radar when advised by Tower.
2. SIDs are also noise abatement routings. Strict adherence within the limits of aircraft performance is mandatory. 3. WARNING: Close-in obstacles.
4. If unable to comply advise ATC before start-up.

KEMPTEN 6E (KPT 6E), KEMPTEN 6W (KPT 6W) RNAV DEPARTURES (OVERLAY 10-3F) (ALL RWYS)

SPEED: MAX 250 KT BELOW FL100 OR AS BY ATC NOT APPLICABLE WITHIN AIRSPACE C

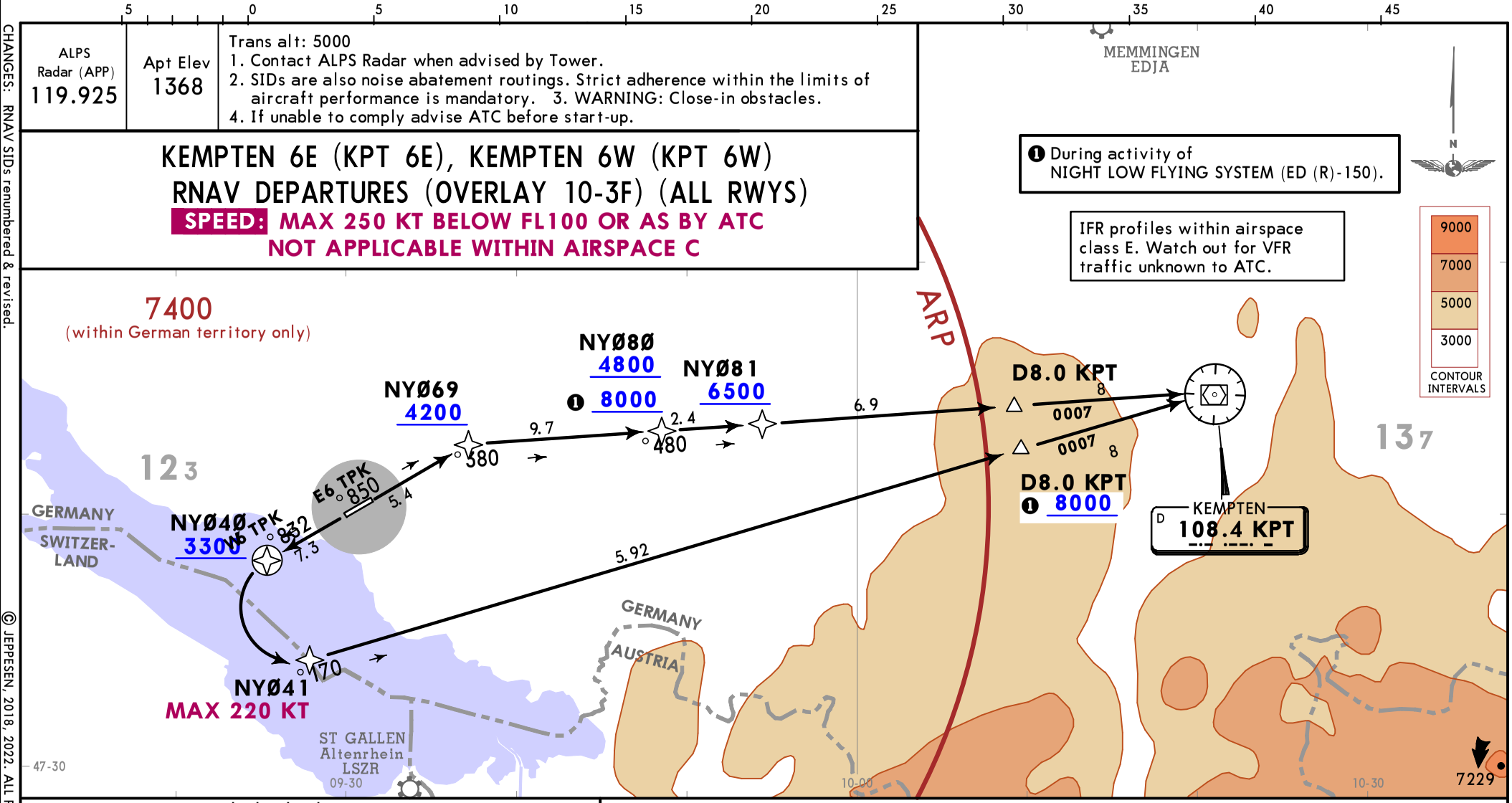

Initial climb clearance **5000**

SID	RWY	ROUTING
KPT 6E	06	(1800+) - NYØ69 (4200+) - NYØ8Ø (4800+) - NYØ81 (6500+) - KPT.
KPT 6W	24	(1800+) - NYØ4Ø (3300+) - NYØ41 (K220-) - KPT.

KPT 6E
This SID requires a minimum climb gradient of
210 per NM (3.4%) up to 2200.

Gnd speed-KT	75	100	150	200	250	300
210 per NM	263	350	525	700	875	1050

CHANGES: RNAV SIDs renumbered & revised.

© JEPPESEN, 2018, 2022. ALL RIGHTS RESERVED.

Printed from JeppView for Windows 5.3.0.0 on 08 Sep 2025; Terminal chart data cycle 16-2023 (Expired); Notice: After 17 Aug 2023, 0000Z, this chart may no longer be valid

EDNY/FDH

Apt Elev **1368'**
N47 40.3 E009 30.7

JEPPESEN **FRIEDRICHSHAFEN, GERMANY**

18 FEB 22 (10-9) **Eff 24 Feb**

FRIEDRICHSHAFEN

*ATIS	*FRIEDRICHSHAFEN Tower	
129.605	120.080	134.305

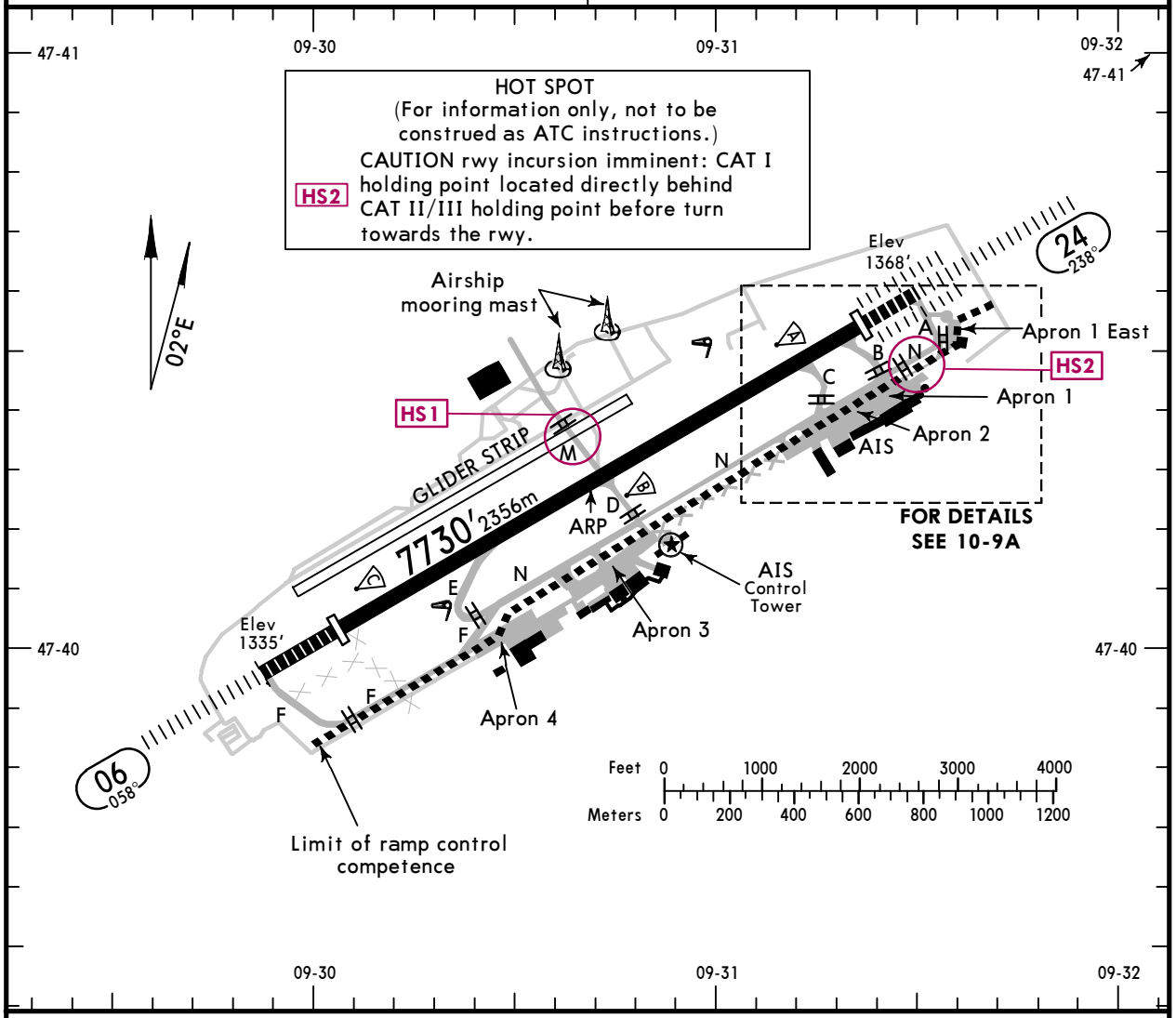

GENERAL

Rwy 24 approved for CAT II/III operations, special aircrew and acft certification required.

CAUTION: Birds in vicinity of airport.
Glider activity on weekends and holidays.

ADDITIONAL RUNWAY INFORMATION

RWY		USABLE LENGTHS LANDING BEYOND Threshold	Glide Slope	TAKE-OFF	WIDTH
06 ❶	HIRL CL (15m) HIALS SFL REIL PAPI-L(3.1°) RVR	6844' 2086m	5932' 1808m	❸	148' 45m
24	HIRL CL (15m) ALSF-II TDZ REIL ❷ RVR	7053' 2150m	5839' 1780m		

❶ Rwy with anti-skid layer.
❷ PAPI-L(3.0°)

❸ TAKE-OFF RUN AVAILABLE

RWY 06:
From rwy head 7251' (2210m)
twy E int 4462' (1360m)
twy D int 3150' (960m)

RWY 24:
From rwy head 7041' (2146m)
twy B int 6102' (1860m)
twy C int 5610' (1710m)
twy D int 3281' (1000m)

Standard TAKE-OFF

	Low Visibility Take-off: 1 HIRL, CL & relevant RVR	RL, CL & relevant RVR	RL & CL	Day: RL & RCLM Night: RL or CL	Day: RL or RCLM Night: RL or CL	Adequate vis ref (Day only)
A B C D	TDZ, MID, RO RVR 125m	TDZ, MID, RO RVR 150m	RVR 200m	RVR 300m	400m	500m

1 RWY 24: RVR 75m with approved guidance system or HUD/HUDLS.

CHANGES: Communications.

© JEPPESEN, 1999, 2022. ALL RIGHTS RESERVED.

Printed from JeppView for Windows 5.3.0.0 on 08 Sep 2025; Terminal chart data cycle 16-2023 (Expired); Notice: After 17 Aug 2023, 0000Z, this chart may no longer be valid

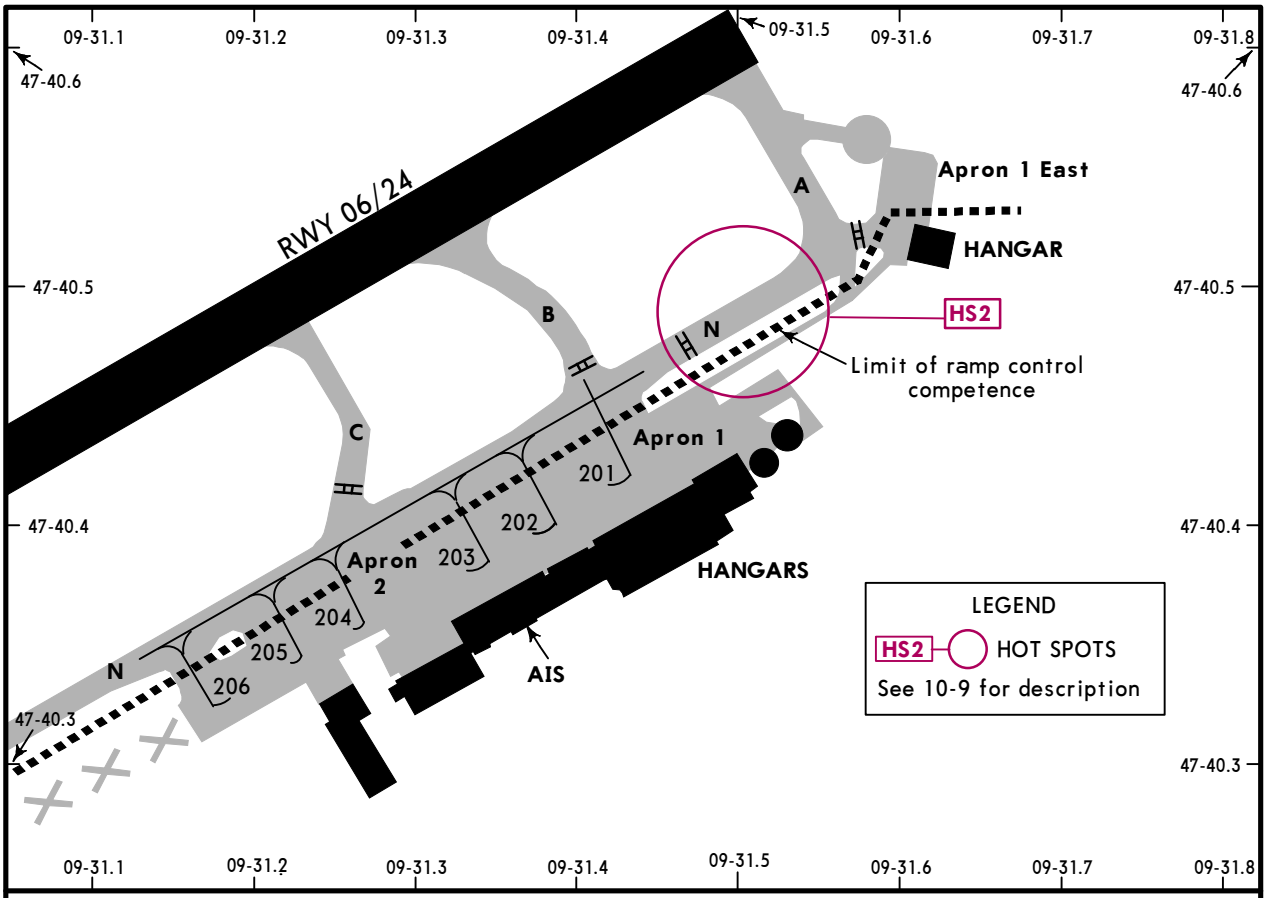

INS COORDINATES

STAND No.	COORDINATES		
201 thru 203 204 205 206	N47 40.4 E009 31.4 N47 40.4 E009 31.3 N47 40.4 E009 31.2 N47 40.3 E009 31.2		

Auxiliary Power Unit (APU): Due to noise restriction reasons, it is prohibited to use the APU for acft during restrictions for night flying. In addition, the use of the APU is only permitted if absolutely necessary and if the supply to the ground installations is not realizable with ground support equipment. This does not apply to the use of the APU for engine start-up.

LOW VISIBILITY PROCEDURES

LVP will be announced via ATIS with the phrase "Low visibility procedures in operation".
LVP become effective when RVR is less than 600m.
If CAT II or III all-weather operations are announced, taxiing outside the apron is permitted for all aircraft on taxiways with operating center line lights, only. Landing aircraft are requested to report leaving the sections with colorcoded taxiway center line lights to indicate that the aircraft has vacated the safety area of the RWY.

CHANGES: None.

© JEPPESEN, 1999, 2021. ALL RIGHTS RESERVED.

Printed from JeppView for Windows 5.3.0.0 on 08 Sep 2025; Terminal chart data cycle 16-2023 (Expired); Notice: After 17 Aug 2023, 0000Z, this chart may no longer be valid

EDNY/FDH
FRIEDRICHSHAFEN

JEPPESEN 6 MAY 22 (11-1) Eff 19 May

FRIEDRICHSHAFEN, GERMANY
ILS or LOC Rwy 06

*ATIS	ALPS Radar (APP)	*FRIEDRICHSHAFEN Tower
129.605	119.925	120.080 134.305

BRIEFING STRIP ™

LOC IFHE	Final Apch Crs	GS	ILS DA(H)	Apt Elev 1368'
111.9	058°	D3.4 FHD 2440' (1105')	Refer to Minimums	Rwy 1335'

MISSED APCH: Climb on 058° to D2.1 FHD or 2000', whichever is later, then turn LEFT to intercept R-068 ZUE to MOKOP climbing to 5000'. MAX 195 KT until established inbound MOKOP.

Alt Set: hPa (IN on req) Rwy Elev: 48 hPa Trans level: By ATC Trans alt: 5000'

DME required.

7400

MSA Airport ❶

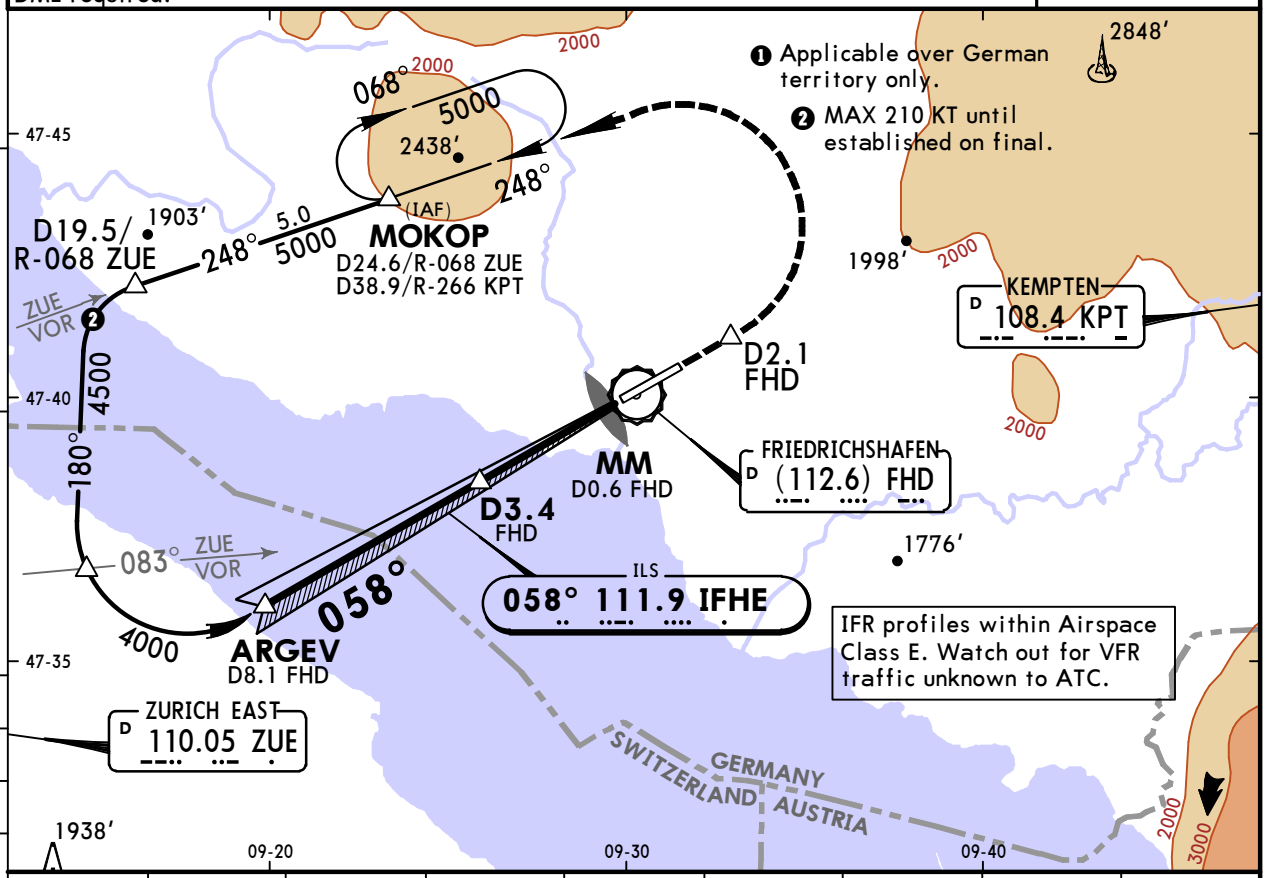

LOC (GS out)	FHD DME	8.0	7.0	6.0	5.0	4.0	3.0	2.0
	ALTITUDE	3950'	3620'	3290'	2960'	2640'	2310'	1980'

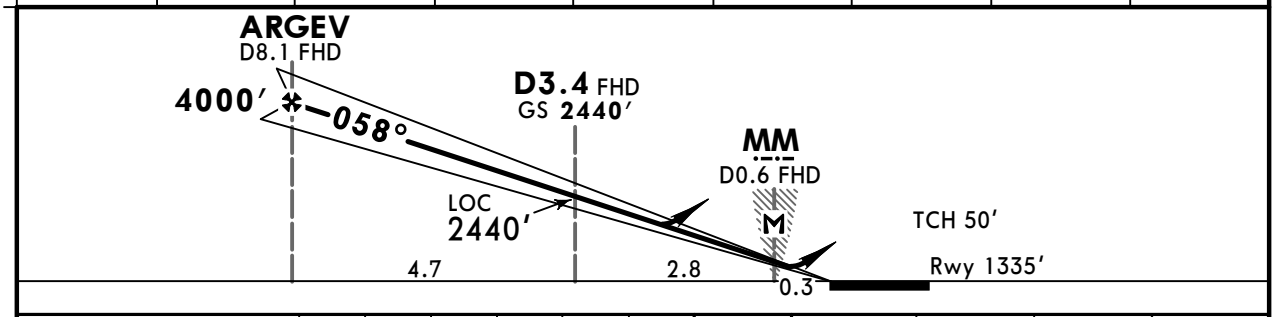

Gnd speed-Kts		70	90	100	120	140	160
ILS GS or LOC Descent Angle	3.10°	384	494	548	658	768	878
MAP at MM/D0.6 FHD							

HIALS REIL PAPI

058° ↑

D2.1 FHD ↑ 2000' ↑ whichever is later

Standard STRAIGHT-IN LANDING RWY 06

	ILS		LOC (GS out)	
	DA(H) AB: 1535' (200')	C: 1539' (204') D: 1549' (214')	CDFA DA/MDA(H) 1760' (425')	
	FULL	ALS out		ALS out
A	RVR 750m	RVR 1200m	RVR 1500m	
B				
C			RVR 1600m	RVR 2000m
D	RVR 800m			

PANS OPS

CHANGES: Minimums.

© JEPPESEN, 2000, 2022. ALL RIGHTS RESERVED.

Printed from JeppView for Windows 5.3.0.0 on 08 Sep 2025; Terminal chart data cycle 16-2023 (Expired); Notice: After 17 Aug 2023, 0000Z, this chart may no longer be valid

EDNY/FDH
FRIEDRICHSHAFEN

JEPPESEN 6 MAY 22 (11-2) Eff 19 May

FRIEDRICHSHAFEN, GERMANY
ILS or LOC Rwy 24

*ATIS	ALPS Radar (APP)	*FRIEDRICHSHAFEN Tower
129.605	119.925	120.080 134.305

BRIEFING STRIP ™

LOC IFHW	Final Apch Crs	ETREM	ILS DA(H)	Apt Elev 1368′
111.9	238°	4000′ (2632′)	Refer to Minimums	Rwy 1368′

MISSED APCH: Climb on 238° to D4.7 FHD or 3000′, whichever is later, then turn RIGHT to intercept R-068 ZUE to MOKOP climbing to 5000′. MAX 210 KT until established inbound MOKOP.

Alt Set: hPa (IN on req) Rwy Elev: 49 hPa Trans level: By ATC Trans alt: 5000′

LOC: DME required.

MSA Airport ❶: 7400

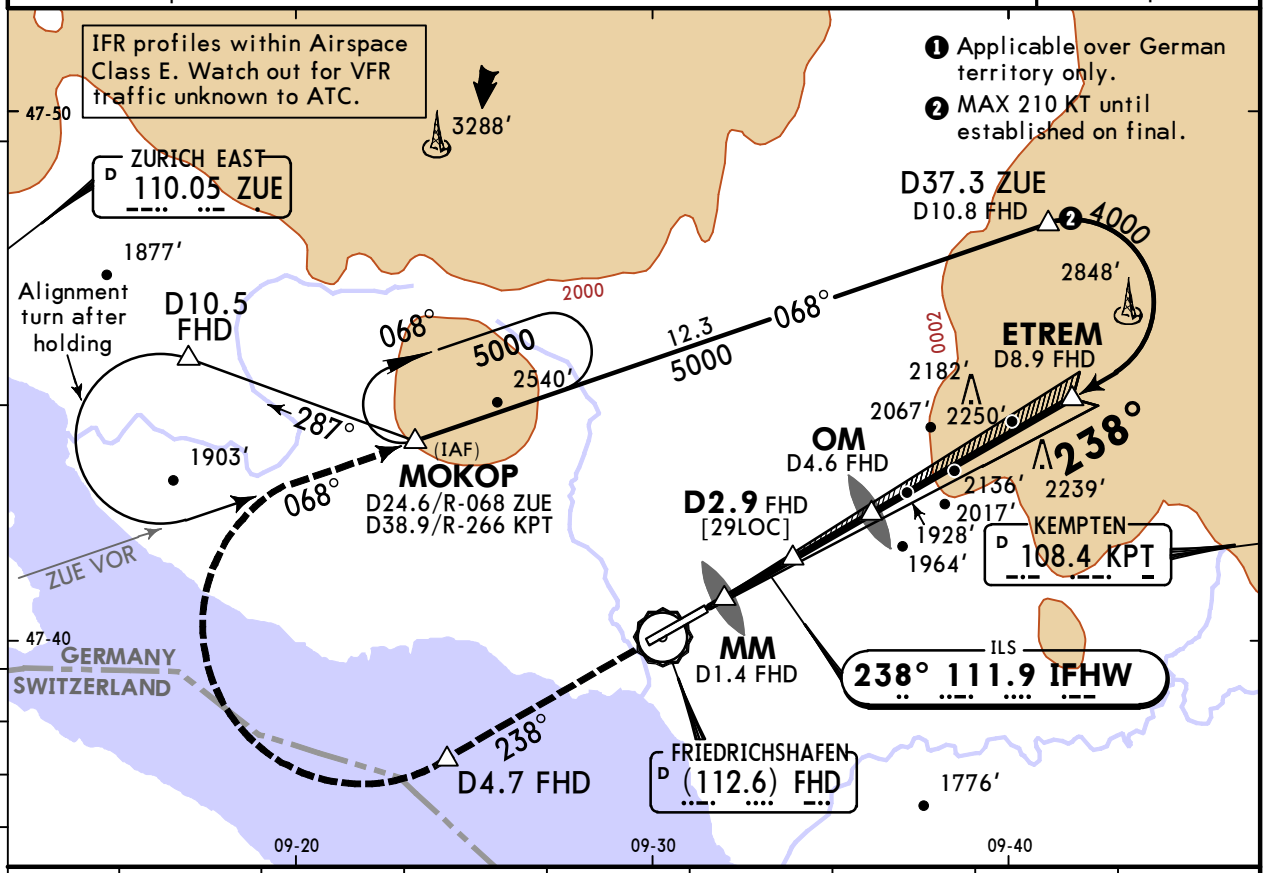

LOC (GS out)	FHD DME	2.0	3.0	4.0	5.0	6.0	7.0	8.0
	ALTITUDE	1780′	2100′	2420′	2730′	3050′	3370′	3690′

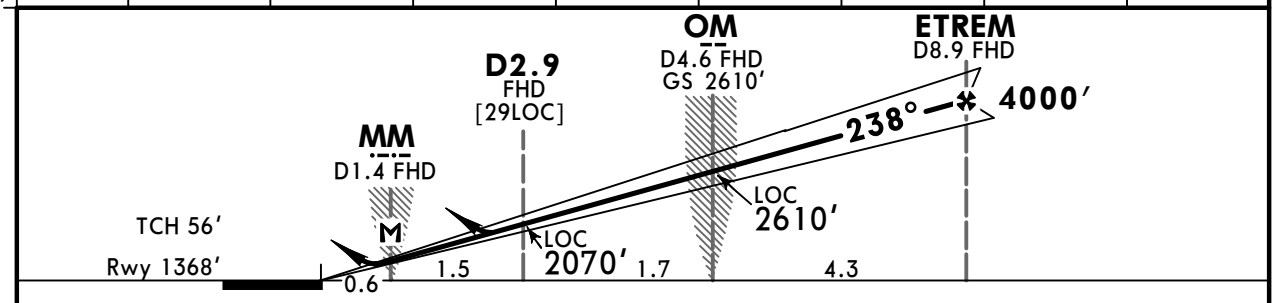

Gnd speed-Kts		70	90	100	120	140	160
ILS GS or LOC Descent Angle	3.00°	372	478	531	637	743	849
MAP at MM/D1.4 FHD							

ALSF-II, REIL, PAPI — 238° — D4.7 FHD — 3000′ whichever is later

Standard STRAIGHT-IN LANDING RWY 24

ILS DA(H): A: 1612′ (244′) B: 1622′ (254′) C: 1631′ (263′) D: 1641′ (273′)

LOC (GS out) CDFA DA/MDA(H) 1730′ (362′)

PANS OPS

	FULL	TDZ or CL out	ALS out		ALS out
A	RVR 550m	RVR 550m ❶	RVR 1300m	RVR 1000m	RVR 1500m
B	RVR 600m	RVR 600m ❶			
C					RVR 1700m
D					

❶ W/o HUD/AP/FD: RVR 750m

CHANGES: Minimums.

© JEPPESEN, 2000, 2022. ALL RIGHTS RESERVED.

Printed from JeppView for Windows 5.3.0.0 on 08 Sep 2025; Terminal chart data cycle 16-2023 (Expired); Notice: After 17 Aug 2023, 0000Z, this chart may no longer be valid

EDNY/FDH
FRIEDRICHSHAFEN

JEPPESEN FRIEDRICHSHAFEN, GERMANY
6 MAY 22 (11-2A) Eff 19 May
CAT II/III ILS Rwy 24

BRIEFING STRIP ™

*ATIS	ALPS Radar (APP)	*FRIEDRICHSHAFEN Tower
129.605	119.925	120.080 134.305

LOC IFHW	Final Apch Crs	ETREM	CAT IIIB, IIIA & II ILS	Apt Elev 1368′
111.9	238°	4000′ (2632′)	Refer to Minimums	Rwy 1368′

MISSED APCH: Climb on 238° to D4.7 FHD or 3000′, whichever is later, then turn RIGHT to intercept R-068 ZUE to MOKOP climbing to 5000′. MAX 210 KT until established inbound MOKOP.

Alt Set: hPa (IN on req) Rwy Elev: 49 hPa Trans level: By ATC Trans alt: 5000′

Special Aircrew & Acft Certification Required.

7400
MSA ❶
Airport

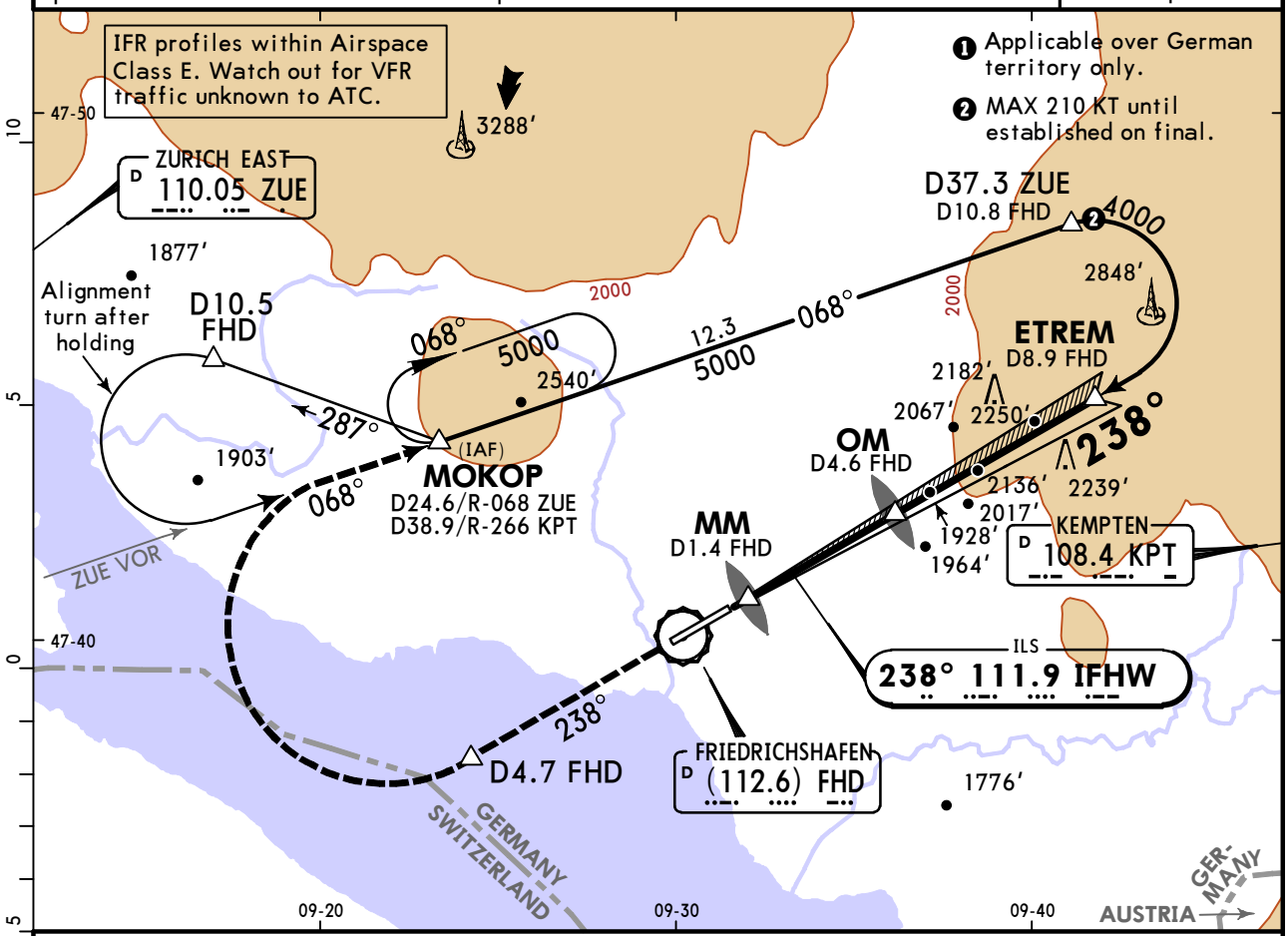

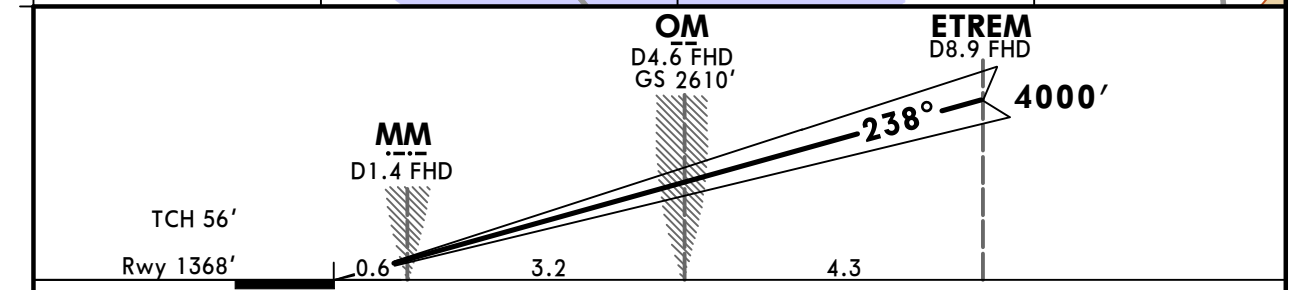

Gnd speed-Kts	70	90	100	120	140	160
GS 3.00°	372	478	531	637	743	849

ALSF-II
REIL
PAPI

238° ↑

D4.7 FHD ↑ whichever is later ↑ 3000′

Standard STRAIGHT-IN LANDING RWY 24

CAT IIIB ILS	CAT IIIA ILS	CAT II ILS	
	DH 50′	A: RA 105′ DA(H) 1468′ (100′) B: RA 108′ DA(H) 1470′ (102′) C: RA 123′ DA(H) 1483′ (115′)	D: RA 135′ DA(H) 1496′ (128′)
RVR 75m	RVR 200m	RVR 300m	RVR 400m

PANS OPS

CHANGES: None.

© JEPPESEN, 2000, 2022. ALL RIGHTS RESERVED.

Printed from JeppView for Windows 5.3.0.0 on 08 Sep 2025; Terminal chart data cycle 16-2023 (Expired); Notice: After 17 Aug 2023, 0000Z, this chart may no longer be valid

EDNY/FDH
FRIEDRICHSHAFEN

JEPPESEN FRIEDRICHSHAFEN, GERMANY
6 MAY 22 (12-1) Eff 19 May
RNP Rwy 06

BRIEFING STRIP

*ATIS	ALPS Radar (APP)	*FRIEDRICHSHAFEN Tower
129.605	119.925	120.080 134.305

EGNOS	Final Apch Crs	ARGEV	LPV CAT I DA(H) Refer to Minimums	Apt Elev 1368′ Rwy 1335′
Ch 92388 E06A	058°	4000′ (2665′)		

MISSED APCH: Climb on 058° to NY48Ø or 2000′, whichever is later, then turn LEFT DIRECT to NY481 on 248° to MOKOP climbing to 5000′. MAX 195 KT until NY481.

7400
MSA Airport
(Over German territory only)

Alt Set: hPa (IN on req) Rwy Elev: 48 hPa Trans level: By ATC Trans alt: 5000′
Baro-VNAV not authorized below -15° C.

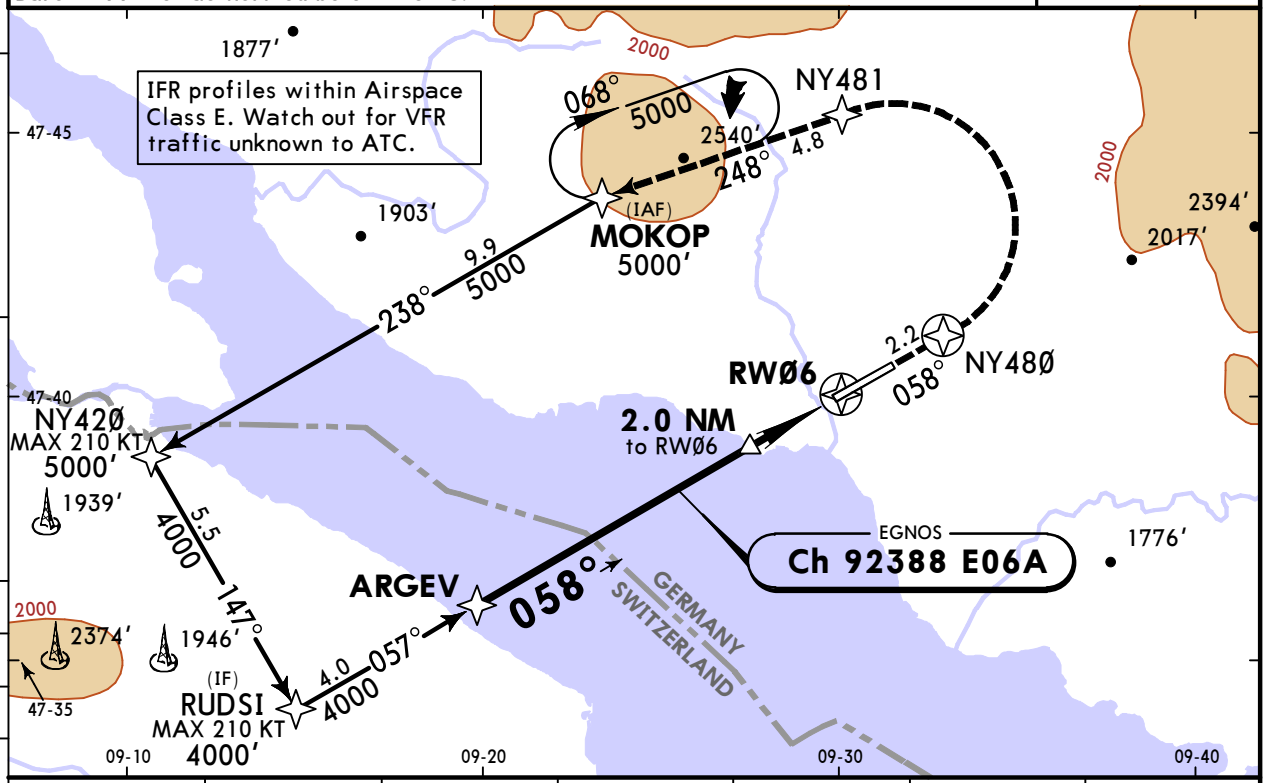

DIST to RWØ6	7.0	6.0	5.0	4.0	3.0	2.0
ALTITUDE	3690′	3360′	3030′	2700′	2370′	2050′

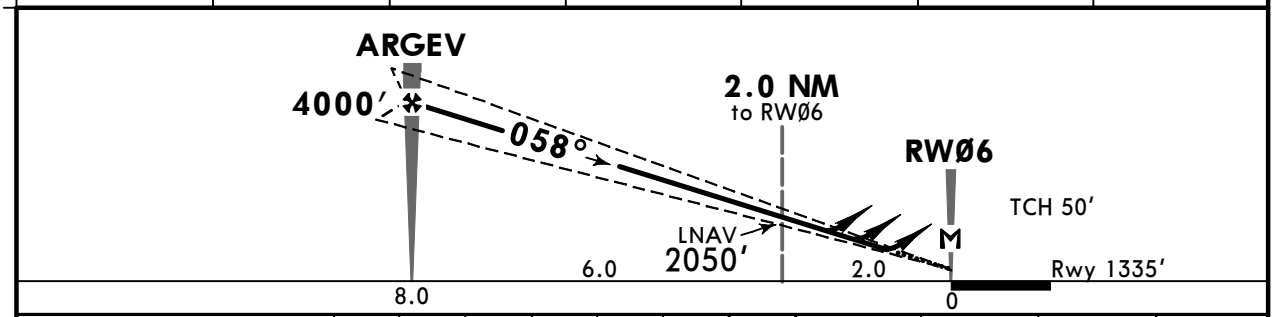

Gnd speed-Kts		70	90	100	120	140	160
Glide Path Angle	3.10°	384	494	548	658	768	878
MAP at RWØ6							

HIALS
REIL
PAPI

058° | NY48Ø 2000′ whichever is later

Standard STRAIGHT-IN LANDING RWY 06

	LPV CAT I	LNAV/VNAV	LNAV
DA(H)	C: 1539′ (204′) AB: 1535′ (200′) D: 1549′ (214′)	A: 1631′ (296′) B: 1641′ (306′) C: 1651′ (316′) D: 1661′ (326′)	CDFA DA/MDA(H) 1760′ (425′)

PANS OPS

		ALS out		ALS out		ALS out
A	RVR 750m	RVR 1200m	RVR 900m	RVR 1400m	RVR 1500m	
B			RVR 1000m			
C					RVR 1600m	RVR 2000m
D	RVR 800m		RVR 1100m	RVR 1500m		

CHANGES: Minimums.

© JEPPESEN, 2010, 2022. ALL RIGHTS RESERVED.

Printed from JeppView for Windows 5.3.0.0 on 08 Sep 2025; Terminal chart data cycle 16-2023 (Expired); Notice: After 17 Aug 2023, 0000Z, this chart may no longer be valid

EDNY/FDH
FRIEDRICHSHAFEN

JEPPESEN FRIEDRICHSHAFEN, GERMANY
6 MAY 22 (12-2) Eff 19 May
RNP Rwy 24

BRIEFING STRIP ™

*ATIS	ALPS Radar (APP)	*FRIEDRICHSHAFEN Tower
129.605	119.925	120.080 134.305

EGNOS	Final Apch Crs	ETREM	LPV CAT I DA(H)	Apt Elev 1368′
Ch 42186 E24A	238°	4000′ (2632′)	Refer to Minimums	Rwy 1368′

7400
MSA Airport
(Over German territory only)

MISSED APCH: Climb on 238° to NY49Ø or 3000′, whichever is later, then turn RIGHT DIRECT to NY491 on 068° to MOKOP climbing to 5000′. MAX 210 KT until NY491.

Alt Set: hPa (IN on req) Rwy Elev: 49 hPa Trans level: By ATC Trans alt: 5000′
Baro-VNAV not authorized below -15° C.

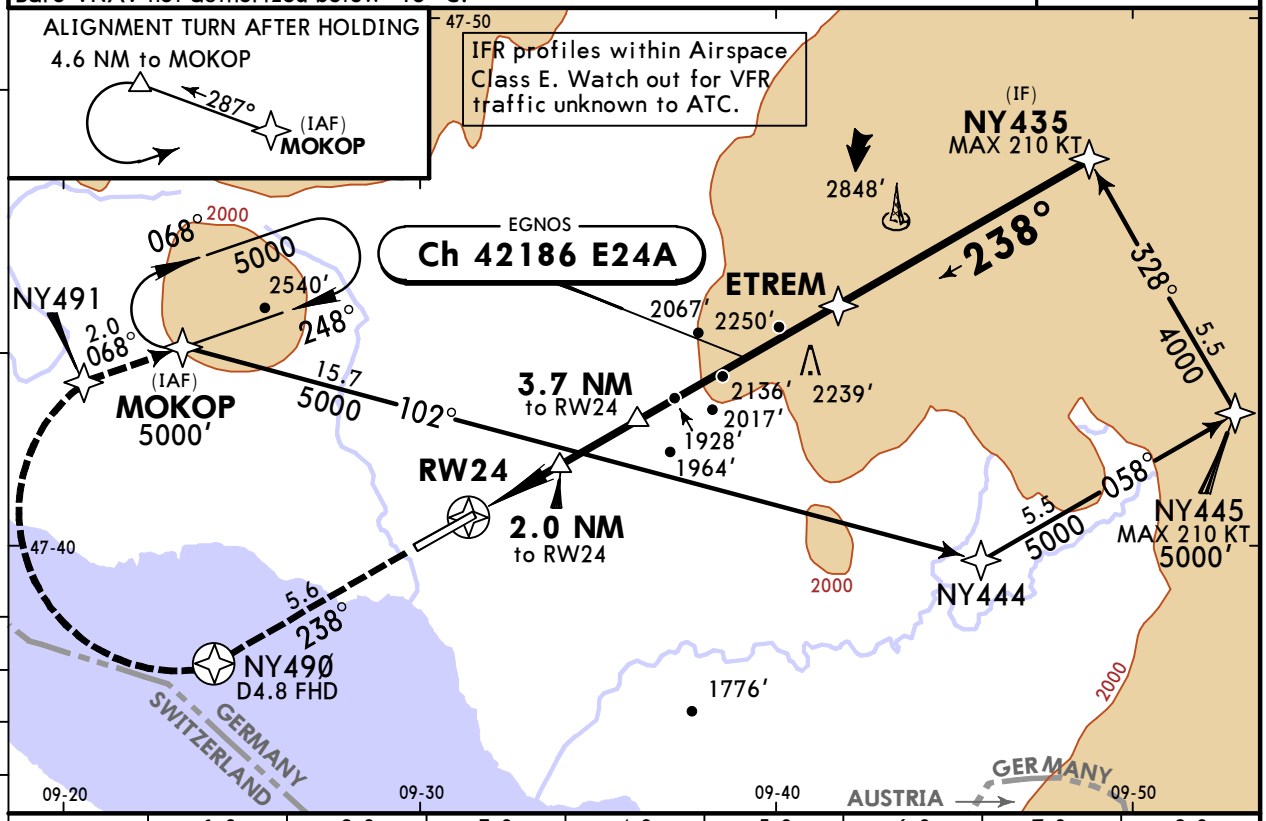

DIST to RW24	1.0	2.0	3.0	4.0	5.0	6.0	7.0	8.0
ALTITUDE	1740′	2060′	2380′	2700′	3010′	3330′	3650′	3970′

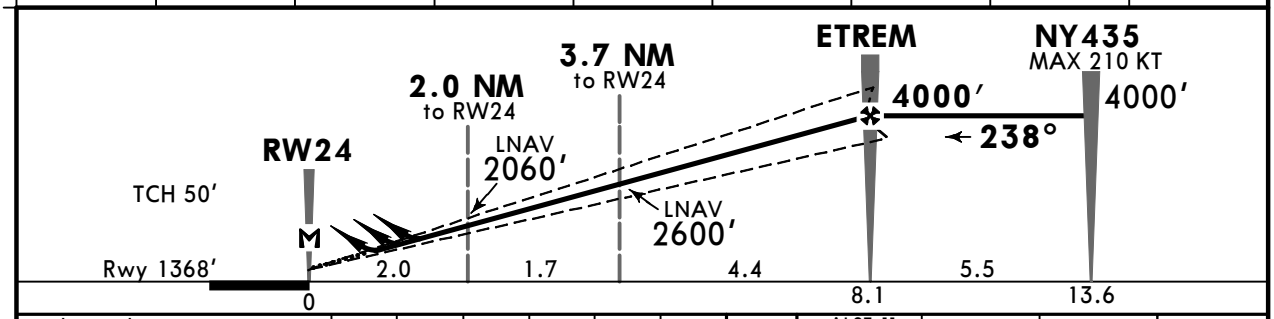

Gnd speed-Kts		70	90	100	120	140	160
Glide Path Angle	3.00°	372	478	531	637	743	849
MAP at RW24							

ALSF-II
REIL
PAPI

238° | NY49Ø | 3000′ whichever is later

Standard STRAIGHT-IN LANDING RWY 24

LPV CAT I	LNAV/VNAV	LNAV
DA(H) A: 1612′ (244′) C: 1631′ (263′) B: 1622′ (254′) D: 1641′ (273′)	DA(H) A: 1621′ (253′) C: 1641′ (273′) B: 1631′ (263′) D: 1657′ (289′)	DA/MDA(H) CDFA 1740′ (372′)

PANS OPS		TDZ or CL out	ALS out		ALS out		ALS out
A	RVR 550m	RVR 550m [1]	RVR 1300m	RVR 750m [2]	RVR 1300m	RVR 1000m	RVR 1500m
B	RVR 600m	RVR 600m [1]					
C							RVR 1700m
D				RVR 750m [3]	RVR 1400m		

[1] W/o HUD/AP/FD: RVR 750m. [2] With TDZ, CL and HUD: RVR 600m. [3] With TDZ, CL and HUD: RVR 650m.

CHANGES: Minimums.

© JEPPESEN, 2010, 2022. ALL RIGHTS RESERVED.

(c) JEPPESEN SANDERSON, INC., 2025, ALL RIGHTS RESERVED

Chart changes since cycle 15-2023

ADD = added chart, REV = revised chart, DEL = deleted chart.

ACT	PROCEDURE IDENT	INDEX	REV DATE	EFF DATE

FRIEDRICHSHAFEN, (FRIEDRICHSHAFEN - EDNY)

(c) JEPPESEN SANDERSON, INC., 2025, ALL RIGHTS RESERVED

TERMINAL CHART CHANGE NOTICES

No Chart Change Notices for Airport EDNY

Chart Change Notices for Country DEU

Type: Gen Tmnl
Effectivity: Permanent
Begin Date: Immediately
End Date: No end date

Location/airport name changed from Monchengladbach to Moenchengladbach.

Type: Gen Tmnl
Effectivity: Permanent
Begin Date: 20210326
End Date: No end date

Use of SID RNAV OVERLAY: Pilots of GPS/FMS-RNAV-equipped aircraft should, if possible, use the defined supplementary GPS/FMS/RNAV procedures which are published as "OVERLAY" to a conventional procedure. Please refer also to ATC Germany pages for additional information.

Type: Gen Tmnl
Effectivity: Permanent
Begin Date: Immediately
End Date: No end date

Location/airport name changed from Buchel to Buechel, Buckeburg to Bueckeburg, Norvenich to Noervenich.

Type: Gen Tmnl
Effectivity: Temporary
Begin Date: Immediately
End Date: Until Further Notice

Jeppesen charted take-off minimums are determined according to the available RWY lights. In Germany, Low Visibility Procedures (LVP) are only available for the following airports: EDDB, EDDC, EDDE, EDDF, EDDG, EDDH, EDDK, EDDL, EDDM, EDDN, EDDP, EDDR, EDDS, EDDV, EDDW, EDFH, EDHI, EDHL, EDJA, EDLN, EDLP, EDLV, EDLW, EDMA, EDNY, EDQM, EDSB, EDTL, EDTY, EDVE, EDVK. All other German airports are notapproved for Low Visibility Take-off Operations (LVTO) with an RVR below 400m because of missing LVP.